EAST RED PEAK LEASE AGREEMENT

This Lease Agreement ("Agreement") is entered into this 1st day of July, 2024 ("Effective Date") between **Desert View Commercial Properties, LLC**, a Nevada limited liability company, hereinafter referred to as "Lessor", and **Washoe County**, a political subdivision of the State of Nevada, hereinafter referred to as "Lessee." For good and valuable consideration, the receipt and sufficiency of which is hereby acknowledged, Lessor and Lessee hereby agree as follows:

1. <u>Premises and Use</u>.

(a) Lessor exclusively owns certain real property assigned Assessor's Parcel Number (APN) 502-250-07, commonly known as East Red Peak, in the County of Washoe, State of Nevada, as described in the attached Exhibit A (the "Property"). Subject to the following terms and conditions, Lessee desires to lease a specific portion of the Property, located at the northeastern portion of Parcel 502-250-07, centered at 39°35'4.13" N 119°47'53.73," and consisting of the area within the boundaries of the chain link fence to be constructed by Lessee on the Property, together with easements for access and utilities, described and depicted in the attached Exhibit B (collectively referred to hereinafter as the "Premises"). The location of the easements for access and utilities is described and depicted in the attached Exhibit B.

(b) Subject to the following terms and conditions, Lessor agrees to lease the Premises unto Lessee and Lessee agrees to lease the Premises from Lessor for such uses as will accommodate the Lessee's construction, installation and operation of a communications site on the subject property including but not limited to a lattice radio tower, a building, radio and microwave antennas, radio transceivers, fiber optic equipment, multiplexers, servers and network equipment, data acquisition and control devices, Remote Weather Information Systems (RWIS), emergency power systems, battery systems, and generators. All equipment at the site, except for the lattice tower, and building is to be housed inside the building or attached to the tower, as shown in attached Exhibit B.

(c) Access: Lessee personnel or contractors shall only access the site during construction of the communications site; for preventative maintenance as necessary; or for emergency communication site repairs.

2. <u>Commencement Date</u>.

The "Commencement Date" of this Agreement shall be the date the radio transceivers installed by Lessee on the Premises begin sending and/or receiving signals, but in no event shall it be more than one hundred eighty (180) days after the Effective Date of this Agreement.

3. <u>Term</u>.

Lessor hereby agrees to LEASE unto Lessor and Lessee hereby agrees to LEASE from Lessor, the subject premises with the term of this Agreement beginning on the Commencement Date and terminating ten (10) years thereafter (the "Term") unless this Agreement is terminated earlier or is renewed in accordance with the provisions of this Agreement.

4. <u>Option to Renew</u>.

Provided that Lessee is not then in breach of default of any obligation under this Agreement, Lessee shall have the option at its sole discretion to renew this lease for one (1) additional term of ten (10) years by giving the Lessor written notice at least ninety (90) days before the expiration of the initial term of this lease. If Lessee exercises its option to renew this Agreement for an additional ten (10) year period, the option period shall commence on the next day after the expiration of the initial term of this Agreement and all the terms and conditions set forth in this Agreement shall apply throughout the renewal period.

5. <u>Rent</u>.

Lessee shall pay to Lessor as rent Two Thousand Dollars and 00/100 Cents ($2,000.00) on the Commencement Date and on the 15th day of each month after the Commencement Date ("monthly rent"). On January 1, 2025, and on January 1 of each year thereafter, Lessee shall pay to Lessor as additional rent a percentage increase to the monthly rent of $2,000.00 equal to the Effective Interest Rates Earned By the Invested Assets of the OASI and DI Trust Funds combined, not to exceed 10%, for the preceding year as determined by the United States Social Security Administration. Lessee's rent shall not be increased each year if the Effective Interest Rates Earned by the Invested Assets of the OASI and DI Trust Funds combined is zero for the preceding year as determined by the United States Social Security Administration.

6. <u>Purpose</u>.

(a) The Premises may be used by Lessee to construct, install, and operate a communications site on the subject property for Washoe County public safety services for the purpose of permitting communications within public safety agencies within the County of Washoe, State of Nevada and to support interoperability between those agencies for communications ("Interagency Public Radio System"). This includes the transmission and reception of radio communication signals in all frequencies authorized by governmental entities ("Permitted Use"), and further includes the placement of radio and microwave equipment licensed by the FCC to Washoe County. Lessee is granted permission to place FCC licensed public safety radio equipment and antennas within the subject premises exclusively for the partner agencies of the Interagency Public Radio System.

(b) Lessee specifically acknowledges and agrees that only support equipment utilized for the Interagency Public Radio System and pertaining to the above-identified agencies shall be installed under this Agreement, and further acknowledges and agrees that Lessee is expressly prohibited from assigning and/or subleasing any of its rights under this Agreement to anyone other than a partner agency to the Interagency Public Radio System. In no event shall Lessor approve additional users for the Premises without Lessee's prior written approval, said approval may be withheld or approved at Lessee's sole discretion.

(c) Lessor and Lessee agree and acknowledge that Lessor has existing agreements in place with other governmental and quasi-governmental agencies for communication site space rent that are outside of this agreement and these specific Premises.

7. Improvements.

(a) Lessee shall have the right to erect, maintain and operate on the Premises its telecommunication facility, including a lattice radio tower, a building, radio and microwave antennas, radio transceivers, fiber optic equipment, multiplexers, servers and network equipment, data acquisition and control devices, Remote Weather Information Systems (RWIS), emergency power systems, battery systems, generators, and security cameras as set forth in the attached Exhibit B. Any additional improvements by Lessee shall be approved by Lessor at Lessor's sole discretion. All improvements shall be accomplished in a workmanlike manner and incompliance with all applicable federal, state, county and municipal laws and regulations.

(b) Lessee agrees to maintain the leased premises in as good a state of repair as when first occupied. During construction, Lessee agrees to only disturb the land for the following purposes: construction or extension of access road, construction of communications tower and building foundations, and installation of footings for solar array. No other land on the surrounding property shall be disturbed in any way. Lessee agrees to be responsible for all replacements and or repairs of communication site equipment within the leased premises. Lessee agrees to be responsible for and to repair any damage to the access road caused by Lessee's use of the access road. This does not include regular wear on the road.

(c) Upon termination of this Agreement, Lessee shall quit the Premises peaceably, with no damage to the Premises, normal wear and tear and damage by insured casualty excepted and shall remove all of Lessee's personal property from the Premises. Further, the Lessor shall remove or cause to be removed, at its own expense, any and all improvements erected or placed by it on said Premises so long as damage to the Premises is avoided or repaired by Lessee within 6 months of the date of termination. Alternatively, Lessor may choose to take ownership of any improvements by paying lessee fair market value for said improvements.

8. Interference.

Lessee shall not use, nor shall Lessee permit its employees, invitees or agents to use any portion of the Property in any way which shall interfere with Lessor and any and all of Lessor's customers' existing telecommunications equipment. If Lessee creates any such interference, Lessee shall eliminate or remedy the interference within ten (10) business days after receiving notice from the Lessor. If the Lessee does not remedy the interference within ten (10) business days it shall be a material breach of this Agreement by the Lessee. In the event any such interference does not cease within ten (10) business days of receipt of notice to Lessee, the parties acknowledge that continuing interference may cause irreparable injury and, therefore, Lessor shall have the right, in addition to any other rights that it may have at law or in equity, to bring action

to enjoin such interference and/or to terminate use of the equipment causing said interference immediately.

Lessor agrees that it shall not permit its customers to use their telecommunications equipment in a manner which shall interfere with Lessee. Lessor and Lessee further agree that any interference caused by equipment or the activities of Lessor's customers which is not eliminated or remedied within ten (10) business days after the Lessor is notified of the interference, then Lessee shall have the right, in addition to any other rights that it may have at law or in equity, to bring action to enjoin such interference, and/or the right to terminate this agreement without penalty.

9. Taxes.

Lessee shall pay any personal property taxes assessed on, or any portion of such taxes attributable to, the improvements identified in Exhibit B. For the term of this Lease, Lessee shall pay when due, as additional rent, any increase in real property taxes levied against the Property which is directly attributable to Lessee's use of the Property upon production of documentary proof of such increase to Lessor. Lessee's obligations under this section include, but are not limited to, the payment of any taxes assessed as a result of Lessee's construction on the Premises. Lessee is not responsible for the payment of any taxes if Lessor does not provide documentary proof that the real property taxes for Lessor's property increased as a result of Lessee's construction and/or improvements on the leased premises.

10. Indemnification; Insurance.

(a) **Indemnification.**

Lessor shall not be liable for any damage to Lessee's equipment on account of criminal burglary, terrorism, vandalism, power failure, lack of heat, weather conditions, wild fire, natural and man-made phenomena such as "skip" interference, power line or ignition noise, and co-channel interference, or any other causes, so long as the cause for such activity is not attributable to Lessor's negligence or more culpable acts or omissions.

Lessor shall hold harmless, indemnify and defend Lessee from and against any loss, damage, claim, suit or liability due to injury, including death, or property damage, to any third party arising out of the negligent or more culpable acts or omissions of the Lessor, its agents or employees, in connection with the ownership of the premises and the real property upon which they are located and the Lessor's duties and responsibilities pursuant to this Agreement.

Lessee shall hold harmless, indemnify, and defend Lessor from and against any loss, damage, claim, suit, or liability due to injury, including death, or property damage, to any third party arising out of the negligent or more culpable acts or omissions of the Lessee, its agents, contractors, or employees, arising out of the use of the demised Premises and the Lessee's duties and responsibilities pursuant to this Agreement.

Liability of both parties shall not be subject to punitive or exemplary damages. Actual damages for any Lessee breach shall never exceed the amount of funds that have been appropriated for payment under this Agreement but not yet paid for the fiscal year budget in existence at the time of the breach.

(b) **Environmental Indemnification.**

Lessee hereby agrees to indemnify, defend, save, and keep Lessor, and Lessor's officers, principals, shareholders, partners, employees, successors, and assigns, harmless from and against any and all liabilities, obligations, charges, losses, damages, penalties, claims, actions, and expenses, including without limitation, engineers' and professional fees, soil tests, and chemical analysis, court costs, legal fees, and expenses through all trial, appellate, and administrative levels, imposed on, incurred by, or asserted against Lessor, in any way relating to, arising out of, or in connection with the use, handling, storage, transportation, or disposal of Hazardous Materials by Lessee or its agents, employees, or contractors in, on, or about the Premises. If hazardous substances have been used, stored, manufactured, released or disposed in or upon the Premises or connected areas outside the Premises, or if the Premises or connected areas outside the Premises, are or become contaminated in any manner, for which Lessor is legally liable, Lessor shall indemnify, defend and hold Lessee harmless from all related claims, judgments, penalties, costs or losses, including all expenses incurred for investigation, removal, remediation and restoration mandated by federal, state and local governments, together with Lessee's attorney fees.

(b) **Brokers**. Neither party to this Agreement shall be liable for any real estate brokers' leasing agents' commissions in the absence of a written agreement, which expressly provides therefor and is signed by the party to be charged. Lessor and Lessee shall indemnify, defend, and hold harmless each other from and against any liability arising from such claims for commissions as a result of its acts.

(c) **Insurance.** Lessee is self-insured. Lessee, at its expense, will insure the Premises. Lessee, at its expense, will insure the Premises and building contents against any loss with all risk property policies. Lessee shall provide a statement of insurance and identify the programs covered under the self-insurance program. Lessee, for its employees, shall provide Worker's Compensation and Employee's Liability insurance with statutory coverages including disease per employee and policy limitations. Any and all claims shall be directed to Washoe County's Risk Management Division.

11. Condemnation.

In the event Lessor receives notification of any condemnation proceedings affecting all or part of the Premises, Lessor will provide notice of the proceeding to Lessee within forty-eight (48) hours. If a condemning authority takes all of the Premises, or a portion sufficient, in Lessee's sole determination, to render the Premises unsuitable for Lessee, base rent shall be paid up to that day and thereafter the Lessee or the Lessor shall have the right to either cancel this Agreement without penalty or to continue in the possession of the remainder of the same under the terms herein

provided, except that the base rent shall be reduced in proportion to the area of that portion of the Premises taken for such public purpose. All damages awarded as compensation for diminution in value to the leasehold or to the fee of the Premises shall belong to and be the property of Lessor. Lessee shall have the right to claim and recover from the condemning authority such compensation as may be separately awarded or recoverable by Lessee in Lessee's own right on account of any and all damages to Lessee's business by reason of the condemnation and for or on account of any cost or loss to which Lessee might be put in removing Lessee's furniture, fixtures, equipment and leasehold improvements.

12. Choice of Law; Attorney's Fees.

(a) **Choice of Law.** The validity, construction, interpretation and enforceability of this Agreement shall be determined and governed by the laws of the State of Nevada, without giving effect to any choice or conflict of law provision or rule (including substantive, procedural, and remedial law whether of Nevada or any other jurisdiction) that would cause the application of the laws of any jurisdiction other than Nevada. The Parties expressly consent to personal jurisdiction in and exclusive venue in the Second Judicial District Court in and for the County of Washoe situated in Washoe County, Nevada. Exclusive venue for any action to enforce this Agreement shall be in the appropriate state court of the State of Nevada situated in Washoe County, Nevada.

(b) **Attorney's Fees.** Neither party to this Agreement shall be entitled to attorneys' fees and costs incurred for any matter related to interpretation or enforcement of this Agreement.

13. Opportunity to Cure.

Any party asserting a breach of this Agreement by reason of a failure to by Lessee to make any payment, or the failure of either the Lessee or Lessor to observe or perform any covenants, conditions, or provisions of this Agreement, shall provide written notice of such default. Except as otherwise set forth in Paragraph 8 ("Interference"), the defaulting party shall have 30 days within which to cure the default except in circumstances where the nature of the default (other than the payment of money) is such that more than 30 days are reasonably required for completion of the cure, in which case the defaulting party shall not be deemed to be in default if such party commences such cure within the 30-day period and thereafter diligently completes the cure. A failure to cure or initiate the cure shall constitute a material breach of this Agreement by such party. Upon the failure to cure or initiate the cure, as applicable, shall entitle the non-defaulting party to pursue all remedies available under Nevada law, including termination of the Lease and recovery of all damages caused by such default.

14. Assignment and Subletting.

Neither party shall assign, transfer or delegate any rights, obligations or duties under this Agreement without the prior written consent of the other party, which consent shall not be unreasonably withheld. It is understood and agreed to by the Parties hereto that a change in tenants from one government agency to another shall not constitute an assignment or subletting. Upon

such assignment, all covenants and agreements herein contained shall extend to and be obligatory upon the heirs, executors, administrators, and successors, as the case may be, of the respective parties.

15. Warranty of Title and Quiet Enjoyment.

Lessor covenants that so long as Lessee performs the covenants, terms and conditions required of Lessee contained herein, Lessee shall peaceably and quietly have, hold and enjoy the Premises and the leasehold estate granted to Lessee by virtue of this Agreement for the aforesaid Term and any extensions thereof, and the Lessor shall not act or permit any third-person to act in any manner which would interfere with or disrupt or frustrate the Lessee's Permitted Use of the Premises. Lessor warrants that Lessor is seized of good and marketable title to the Premises and has the full power and authority to enter into and execute this Agreement.

16. Notices.

Except as otherwise provided for within this Agreement, all notices, requests, demands, rent payments, or other communications required or permitted to be given under this Agreement shall be in writing and shall be deemed to have been duly given if delivered personally in hand, by telephonic facsimile or electronic mail with simultaneous regular mail, or mailed certified mail, return receipt requested, postage prepaid on the date posted and addressed to the other party at the address set forth below:

For Lessee:
Washoe County
ATTN: Director of Community Services
P.O. Box 11130
Reno, Nevada 89520

And: Washoe County
ATTN: Regional Communications Coordinator
P.O. Box 11130
Reno, Nevada 89520

For Lessor:
David Metts
Desert View Commercial Properties, LLC
1032 Duck Hill Road
Washoe Valley, NV 80704

Either may shall change its address or phone or fax numbers for purposes of this Section 15 by giving notice of such change in the manner provided in this Section 15. Notice shall be effective three days after mailing, or the day of delivery if notice is provided by personal service.

17. Notice of Third-Party Claims.

Lessor shall serve the Lessee with written notice of any third-party claim, suit and or legal action which may affect Lessee's use of the premises, with Lessor to serve the Lessee with such written notice within thirty (30) days of the Lessor's receipt of oral and or written notice of actual or pending claim, suit and or legal action. Lessee shall have the right to defend and compromise the actual or pending claim, suit and or legal action and Lessor shall indemnify the Lessee against all liability, actions, damages, losses and expenses, including but not limited to reasonable attorney's fees and costs arising out of the Lessee's defense and compromise of such actual or pending claims, suits and or legal actions, to the fullest extent authorized under the terms of this Agreement.

18. Hazardous Materials.

(a) **Lessee Operations.** Lessee shall not cause in, on, or under the Premises, or suffer or permit to occur in, on, or under, the Premises any generation, use, manufacturing, refining, transportation, emission, release, treatment, storage, disposal, presence, or handling of Hazardous Materials, except that limited quantities of Hazardous Materials may be used, handled, or stored on the Premises, provided such limited quantities of Hazardous Materials are incident to and reasonably necessary for the maintenance of the Premises or Lessee's operations for its Permitted Use and are in compliance with all Environmental Laws. Should a release of any Hazardous Material occur at the Premises or the Building Complex as a result of the acts or omissions of Lessee, or its employees, agents, contractors, or invitees, Lessee shall immediately contain, remove from the Premises, and/or properly dispose of such Hazardous Materials and any material contaminated by such release, and remedy and mitigate all threats to human health or the environment relating to such release, all in accordance with Environmental Laws.

For purposes of this Agreement, "Environmental Laws" shall mean all Laws: (a) relating to the environment, human health, or natural resources; (b) regulating, controlling, or imposing liability or standards of conduct concerning any Hazardous Materials; (c) relating to Remedial Action; and (d) requiring notification or disclosure of releases of Hazardous Materials or of the existence of any environmental conditions on or at the Premises, as any of the foregoing may be amended, supplemented, or supplanted from time to time.

For purposes of this Agreement, "Hazardous Materials" shall mean any pollutant, contaminant, or hazardous, dangerous, or toxic chemicals, materials, or substances within the meaning of any applicable local, state, or federal environmental law relating to or imposing liability or standards of conduct concerning any hazardous, toxic, or dangerous waste substance or material, all as amended or hereafter amended.

19. Termination.

In accordance with NRS 244.320, the continuation of this Agreement is subject to and contingent upon sufficient funds being appropriated, budgeted and otherwise made available by the Board of County Commissioners each fiscal year. The parties further agree that if the funding is not approved, appropriated, or is withdrawn for any reason by the Board of County Commissioners, this Agreement shall automatically terminate, and Lessee shall have no further obligation under this Agreement. In the event of such a termination, the Lessor waives any and all claims for damages. To address Lessee improvements upon termination, the parties should refer to section 7(c) of this Agreement.

In addition to any other provisions contained herein, this Agreement may be terminated on thirty (30) days prior written notice as follows: (i) by either party upon a default of any condition, covenant or term of this Agreement by the other party, which default is not cured in accordance with the provisions of Section 13 "Opportunity to Cure" of this Agreement; or (ii); if Lessee is unable to obtain, maintain, operate or otherwise forfeits or cancels any required approval(s) or the issuance of license or permit by any governmental authority for the construction or operation of the Facility identified in Exhibit B.

Failure to declare a breach, or a waiver of any particular breach, of the Agreement or its material or nonmaterial terms by either party shall not operate as a waiver by such party of any of its rights or remedies as to any other breach.

Except as otherwise provided for by law or this Agreement, the rights and remedies of the parties shall not be exclusive and are in addition to any other rights and remedies provided by law or equity, including but not limited to actual damages.

20. Authority.

Each person executing this Agreement on behalf of any party warrants that he/she has the right and authority to execute this Agreement, and that all the procedures and approvals that are necessary and required to enable him/her to properly execute this Agreement and to bind the person or entity whom he/she represents in accordance with the terms hereof have been followed and/or secured. Each party agrees to execute and deliver all documents and to perform all further acts as may be reasonably necessary to carry out the provisions of this Agreement.

21. Miscellaneous.

(a) **Binding Effect.** This Agreement shall extend to and bind the heirs, personal representatives, successors, and assigns of Lessor and Lessee and shall constitute covenants running with the land.

(b) **Headings; Gender.** The headings, captions, and numbers in this Agreement are solely for convenience and shall not be considered in construing or interpreting any provision in this Agreement. Wherever appropriate in this Agreement, personal pronouns shall be deemed to include other genders and the singular to include the plural, if applicable.

(c) **Counterparts.** This Agreement may be executed in several counterparts, each of which shall constitute an original and all of which together shall constitute but one and the same agreement. The original execution pages of counterpart copies of this Agreement may be attached to any one such copy to form a single, complete document.

(d) **Limited Relationship.** Nothing contained in this Lease shall be deemed or construed by the parties hereto or by any third person to create the relationship of principal and agent, partnership, joint venture or any association between Lessee and Lessor other than contracting parties.

(e) **Survival.** The provisions hereof, which by their nature are continuing, continue in full force and effect and shall bind the parties beyond any termination, cancellation, or expiration hereof and shall not be deemed to merge into any deed or other conveyance or document to be provided pursuant to this Agreement.

(f) **Severability.** If any provision of this Agreement is found by a court of competent jurisdiction to be invalid or unenforceable, then such provisions shall be severed from this Agreement and the remainder will remain in full force and effect.

(g) **Waivers.** The failure of either party at any time to require performance of any provision of this Agreement shall not limit such party's right to enforce said provision or require the timely performance of any other obligation. The waiver of any breach of any provision in this Agreement shall not constitute a waiver of any succeeding breach thereof or the breach of any other provision.

(h) **Time of Performance.** Time is of the essence in the performance of each obligation set forth in this Agreement.

(i) **Entire Agreement.** This Agreement, including the Exhibits, and any written Amendments and/or Addendum hereto that may be executed from time to time by the parties, constitutes the entire agreement between the parties pertaining to the subject matter hereof and contains all the agreements, promises, and understandings between the Lessor and Lessee, and no verbal or oral agreements, promises, statements, assertions, or representations by Lessor or Lessee or any employees, agents, contractors or other representations of either, shall be binding upon Lessor or Lessee. This Agreement cannot be changed, modified, or amended, in whole or in part, except by a written amendment executed by Lessor and Lessee in the same manner as this Agreement is executed.

IN WITNESS WHEREOF, the parties have executed this Agreement as of the date first above written.

LESSOR: DESERT VIEW COMMERCIAL PROPERTIES, LCC

By: _____
David L. Metts, Manager

LESSEE: WASHOE COUNTY, a political sub-division of the State of Nevada

By: _____

_____
Washoe County Commission

Exhibit A

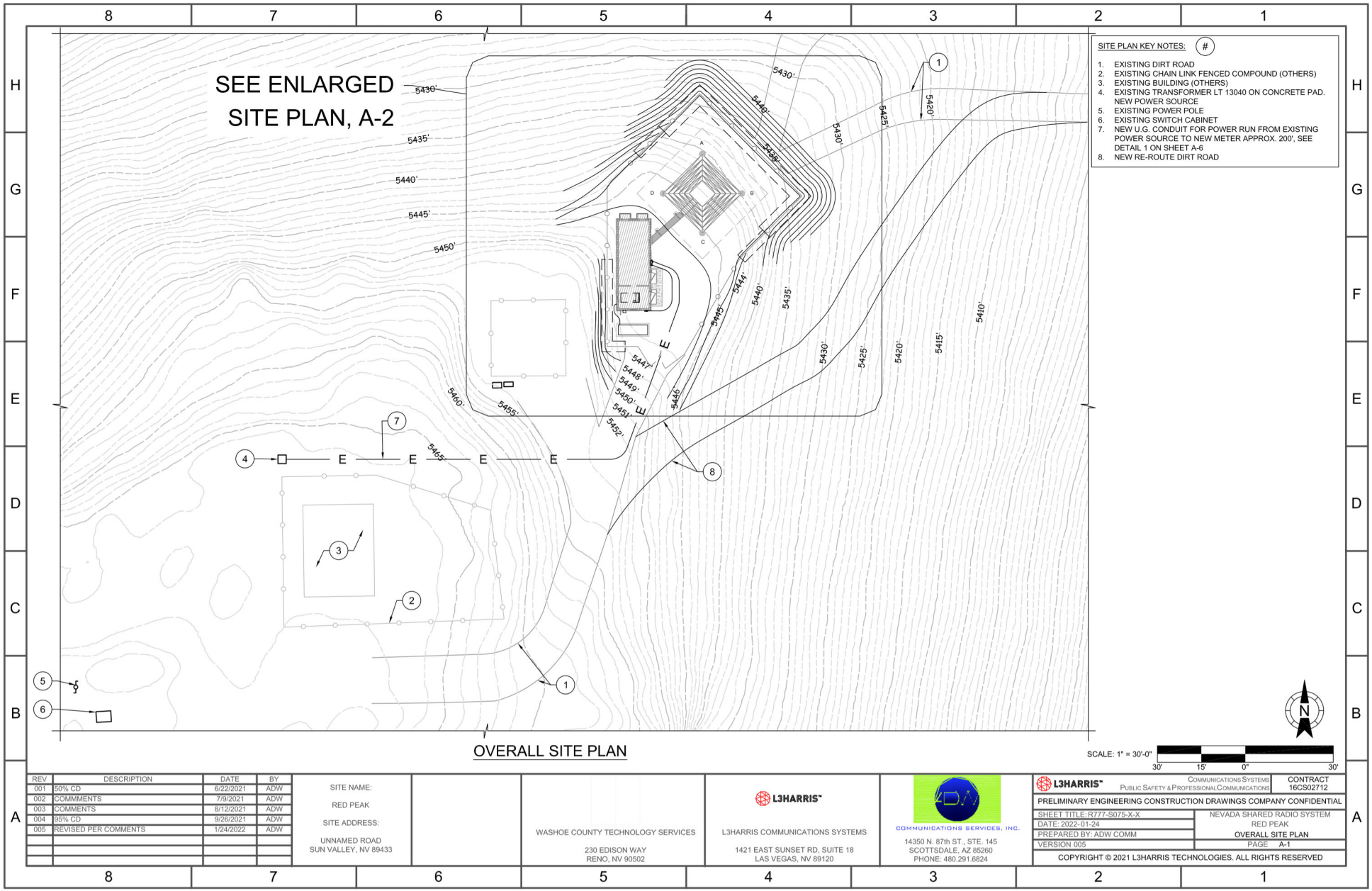
SEE ENLARGED SITE PLAN, A-2
SITE PLAN KEY NOTES: #
1. EXISTING DIRT ROAD
2. EXISTING CHAIN LINK FENCED COMPOUND (OTHERS)
3. EXISTING BUILDING (OTHERS)
4. EXISTING TRANSFORMER LT 13040 ON CONCRETE PAD. NEW POWER SOURCE
5. EXISTING POWER POLE
6. EXISTING SWITCH CABINET
7. NEW U.G. CONDUIT FOR POWER RUN FROM EXISTING POWER SOURCE TO NEW METER APPROX. 200', SEE DETAIL 1 ON SHEET A-6
8. NEW RE-ROUTE DIRT ROAD
OVERALL SITE PLAN
SCALE: 1" = 30'-0"
30' 15' 0" 30'
N
REV DESCRIPTION DATE BY
001 50% CD 6/22/2021 ADW
002 COMMMENTS 7/9/2021 ADW
003 COMMENTS 8/12/2021 ADW
004 95% CD 9/26/2021 ADW
005 REVISED PER COMMENTS 1/24/2022 ADW
SITE NAME:
RED PEAK
SITE ADDRESS:
UNNAMED ROAD
SUN VALLEY, NV 89433
WASHOE COUNTY TECHNOLOGY SERVICES
230 EDISON WAY
RENO, NV 90502
L3HARRIS
L3HARRIS COMMUNICATIONS SYSTEMS
1421 EAST SUNSET RD, SUITE 18
LAS VEGAS, NV 89120
COMMUNICATIONS SERVICES, INC.
14350 N. 87th ST., STE. 145
SCOTTSDALE, AZ 85260
PHONE: 480.291.6824
L3HARRIS
COMMUNICATIONS SYSTEMS
PUBLIC SAFETY & PROFESSIONAL COMMUNICATIONS
CONTRACT 16CS02712
PRELIMINARY ENGINEERING CONSTRUCTION DRAWINGS COMPANY CONFIDENTIAL
SHEET TITLE: R777-S075-X-X
DATE: 2022-01-24
PREPARED BY: ADW COMM
VERSION 005
NEVADA SHARED RADIO SYSTEM
RED PEAK
OVERALL SITE PLAN
PAGE A-1
COPYRIGHT © 2021 L3HARRIS TECHNOLOGIES. ALL RIGHTS RESERVED

Exhibit B

NEVADA SHARED RADIO SYSTEMS

SITE NAME:

RED PEAK

UNNAMED ROAD
SUN VALLEY, NV 89433
WASHOE COUNTY

GENERAL NOTES

THE ARCHITECTS/ENGINEERS HAVE MADE EVERY EFFORT AS SET FORTH IN THE CONSTRUCTION DRAWINGS, CONTRACT DOCUMENTS AND THE COMPLETE SCOPE OF WORK. CONTRACTORS BIDDING THE JOB ARE NEVERTHELESS CAUTIONED THAT MINOR OMISSIONS OR ERRORS IN THE DRAWINGS AND SPECIFICATIONS SHALL NOT EXCUSE SAID CONTRACTOR FROM COMPLETING THE PROJECT AND IMPROVEMENTS IN ACCORDANCE WITH THE INTENT OF THESE DOCUMENTS. THE BIDDER SHALL BEAR THE RESPONSIBILITY OF NOTIFYING (IN WRITING) THE ARCHITECT/ENGINEER OF ANY CONFLICTS, ERRORS OR OMISSIONS PRIOR TO THE SUBMISSION OF THE CONTRACTOR'S PROPOSAL. IN THE EVENT OF DISCREPANCIES THE CONTRACTOR SHALL PRICE THE MORE COSTLY OR EXTENSIVE WORK UNLESS OTHERWISE DIRECTED.

CODE COMPLIANCE

ALL WORK AND MATERIALS SHALL BE PERFORMED AND INSTALLED IN ACCORDANCE WITH THE CURRENT EDITIONS OF THE FOLLOWING CODES AS ADOPTED BY THE LOCAL GOVERNING AUTHORITIES. NOTHING IN THESE PLANS IS TO BE CONSTRUED TO PERMIT WORK NOT CONFORMING TO THESE CODES.

2018 INTERNATIONAL BUILDING CODE (IBC) ADMENDMENTS
2018 INTERNATIONAL EXISTING BUILDING CODE (IEBC) ADMENDMENTS
2018 INTERNATIONAL MECHANICAL CODE (IMC) ADMENDMENTS
2018 INTERNATIONAL FUEL GAS CODE (IFGC) ADMENDMENTS
2018 INTERNATIONAL PLUMBING CODE (IPC) ADMENDMENTS
2017 NATIONAL ELECTRICAL CODE (NEC) ADMENDMENTS
2018 INTERNATIONAL FIRE CODE (IFC) ADMENDMENTS
2018 INTERNATIONAL ENERGY CONSERVATION CODE (IECC) ADMENDMENTS
ANSI/EIA-222-G STRUCTURAL STANDARD FOR ANTENNA SUPPORTING STRUCTURES AND ANTENNAS

JURISDICTION: WASHOE COUNTY

VICINITY MAP

DRIVING DIRECTIONS

FROM RENO CITY, NV: MERGE ONTO I-580 N VIA THE RAMP TO I-80. MERGE ONTO I-580 N. KEEP LEFT TO STAY ON I-580 N. CONTINUE ONTO US-395 N. TAKE EXIT 72 TOWARD PANTHER VALLEY. CONTINUE ONTO CARSON-RENO HWY (OLD US 395/N VIRGINIA ST). TURN LEFT ONTO PANTHER DR. TURN RIGHT ONTO W RANGER RD. TURN LEFT ONTO NEWPORT LN. SLIGHT RIGHT ONTO COLLINS CIR. CONTINUE STRAIGHT ONTO CAROLYN WAY. TURN LEFT ONTO SAGEHEN LN AND CONTINUE TO TRAVEL 0.5 MI TO KTHX-FM RENO FACILITY. PASSING KTHX-FMM RENO APPROXIMATELY 300 FEET, DESTINATION IS LOCATED ON THE EXISTING DIRT ROAD.

PROJECT TEAM

PROJECT OWNER:	WASHOE COUNTY TECHONOLOGY SERVICES 230 EDISON WAY RENO, NV 90502 CONTACT: MELISSA LAWNEY
PROJECT MANAGER:	L3HARRIS COMMUNICATIONS SERVICES 1421 EAST SUNSET RD, SUITE 18 LAS VEGAS, NV 89120 CONTACT: HEATHER TAYLOR PHONE: (775) 856-8839
APPLICANT:	L3HARRIS COMMUNICATIONS SYSTEMS 1421 EAST SUNSET RD. SUITE 18 LAS VEGAS, NEVADA 89120 CONTACT: HEATHER V. TAYLOR PHONE: (775) 856.8839 EMAIL: Heather.Taylor@L3Harris.com
CONSULTANT:	ADW COMMUNICATIONS SERVICES, INC. 14350 NORTH 8TH STREET SCOTTSDALE, ARIZONA 85026 CONTACT: LARRY ZAK PHONE: (480) 291.6820 EMAIL: lzak@adwcomm.com
TOWER MANUFACTURER:	SABRE INDUSTRIES 7101 SOUTHBRIDGE DRIVE P.O. BOX 658 SIOUX CITY, IA 51102 PHONE: (712) 258-6690

PROJECT INFORMATION

SITE ADDRESS:	UNNAMED ROAD SUN VALLEY, NV 89433
SITE COORDINATES:	LATITUDE: 39° 35' 04.27" N (NAD 83) LONGITUDE: -119° 47' 53.64" W (NAD 83) ELEVATION: 5,445.0' (AMSL) (NAVD 88)
PROPERTY OWNER:	DESERT VIEW COMMERCIAL PROPERTIES, LLC
APN NUMBER:	502-250-07
CURRENT ZONING:	GR
CONSTRUCTION TYPE:	VB
OCCUPANCY:	U FOR TOWER
CURRENT USE:	VACANT LAND
NEW USE:	UNMANNED TELECOMMUNICATIONS FACILITY
LEASE AREA:	±2608.94 SQ FT

SPECIAL INSPECTIONS

DRILLED CAISSON (PERIODIC)	NO
CONCRETE CONSTRUCTION (CONTINUOUS)	YES
BOLTS IN CONCRETE & HIGH STRENGTH BOLTS (CONTINUOUS)	YES
REINFORCING STEEL (PERIODIC)	YES
EXPANSION AND EPOXY BOLTS (CONTINUOUS)	YES
SOIL COMPACTION BELOW SLAB ON GRADE (PERIODIC)	YES

UTILITY TABLE

UTILITY:	PROVIDER:
WATER	N/A
SEWER	N/A
ELECTRICAL	TBD
TELEPHONE/FIBER	N/A
POLICE	TBD
FIRE	TBD

PROJECT NOTES

PROJECT NOTES:

1. THE FACILITY IS UNMANNED WITH RESTRICTED ACCESS. EQUIPMENT ROOM/SHELTER AND WILL BE USED FOR THE TRANSMISSION OF RADIO SIGNALS FOR THE PURPOSE OF WASHOE COUNTY COMMUNICATION.
2. A TECHNICIAN WILL VISIT THE SITE APPROXIMATELY ONCE A MONTH FOR ROUTINE INSPECTION AND MAINTENANCE AND THE WORK ASSOCIATED WITH ANY EQUIPMENT IS NOT TYPICALLY PERFORMED BY PERSONS WITH DISABILITIES.
3. NO SANITARY SEWER, POTABLE WATER OR WASTE DISPOSAL IS REQUIRED.
4. ADA COMPLIANCE IS NOT REQUIRED PER IBC SECTION 1103.2.9

SHEET INDEX

TITLE:	DESCRIPTION:
T-1	TITLE SHEET & PROJECT INFORMATION
T-2	ABBREVIATIONS & LEGEND
GN-1	GENERAL NOTES
GN-2	GENERAL NOTES
GN-3	GENERAL NOTES
GN-4	ABBREVIATIONS & LEGEND
A-1	OVERALL SITE PLAN
A-2.1	ENLARGED SITE PLAN
A-2.2	GRADING PLAN
A-2.3	FLOOR PLAN - FINAL
A-2.4	ENTRY PORT DIAGRAM
A-3.1	TOWER ELEVATION
A-3.2	TOWER APPURTENANCE CHART
A-4	CONSTRUCTION DETAILS
A-5	CONSTRUCTION DETAILS
A-6	CONSTRUCTION DETAILS
A-7	CONSTRUCTION DETAILS
A-8	CONSTRUCTION DETAILS
E-1	ELECTRICAL NOTES
E-2	ELECTRICAL NOTES
E-3	ONE-LINE DIAGRAM
G-1	GROUNDING PLAN
G-2	GROUNDING DETAILS
G-3	GROUNDING DETAILS
ATTACHMENT:	
REPORT	GEOTECHNICAL INVESTIGATION REPORT
REPORT	TOWER CALCULATIONS (SABRE INDUSTRIES)

PROJECT DESCRIPTION

THE SITE PROPOSED SCOPE INCLUDES THE INSTALLATION OF A NEW SELF-SUPPORT TOWER WITH NEW ANTENNAS & TOWER FOUNDATION, NEW EQUIPMENT SHELTER, GENERATOR, ICE BRIDGE, AND NEW WALL FOOTING FOR NEW CHAIN LINK FENCE COMPOUND.

REV	DESCRIPTION	DATE	BY
001	50% CD	6/22/2021	ADW
002	COMMMENTS	7/9/2021	ADW
003	COMMENTS	8/12/2021	ADW

SITE NAME:
RED PEAK
SITE ADDRESS:
UNNAMED ROAD
SUN VALLEY, NV 89433

WASHOE COUNTY TECHNOLOGY SERVICES
230 EDISON WAY
RENO, NV 90502

L3HARRIS COMMUNICATIONS SYSTEMS
1421 EAST SUNSET RD, SUITE 18
LAS VEGAS, NV 89120

COMMUNICATIONS SERVICES, INC.
14350 N. 87th ST., STE. 145
SCOTTSDALE, AZ 85260
PHONE: 480.291.6824

L3HARRIS™ COMMUNICATIONS SYSTEMS
PUBLIC SAFETY & PROFESSIONAL COMMUNICATIONS

CONTRACT 16CS02712

PRELIMINARY ENGINEERING CONSTRUCTION DRAWINGS COMPANY CONFIDENTIAL

SHEET TITLE: R777-S075-X-X
DATE: 2021-07-09
PREPARED BY: ADW COMM
VERSION 003

NEVADA SHARED RADIO SYSTEM
RED PEAK
TITLE SHEET
PAGE T-1

COPYRIGHT © 2021 L3HARRIS TECHNOLOGIES. ALL RIGHTS RESERVED

Exhibit B

PART 1. SCOPE OF WORK

1.0 FOR THE PURPOSE OF CONSTRUCTION DRAWING, THE FOLLOWING DEFINITIONS SHALL APPLY

- CONTRACTOR - L3HARRIS / L3HARRIS
- SUBCONTRACTOR - GENERAL CONTRACTOR (CONSTRUCTION)
- OWNER - WASHOE COUNTY
- OEM - ORIGINAL EQUIPMENT MANUFACTURER

1.1 CODES AND REGULATIONS

A. COMPLY WITH GOVERNING FEDERAL, STATE & LOCAL LAW, ORDINANCE, CODE, RULES & REGULATIONS, SAFETY AND OSHA REGULATIONS/DIRECTIVE. WHERE CONTRACT DOCUMENTS EXCEED THESE REQUIREMENTS, CONTRACT DOCUMENTS SHALL GOVERN. IN NO CASE SHALL WORK BE INSTALLED CONTRARY TO OR BELOW MIN. LEGAL STANDARDS. IT IS SUBCONTRACTOR'S RESPONSIBILITY TO ENSURE ALL STANDARDS ARE MET, AND TO PRODUCE VERIFICATION OF THESE ITEMS UPON REQUEST.

B. UNLESS INDICATED OTHERWISE, THE LATEST PUBLISHED STANDARDS OF THE FOLLOWING ASSOCIATIONS/ORGANIZATIONS SHALL BE FOLLOWED AND APPLIED WHERE APPLICABLE, AS MIN. REQUIREMENTS.

- (ANSI) AMERICAN NATIONAL STANDARDS INSTITUTE.
- (ASTM) AMERICAN SOCIETY FOR TESTING AND MATERIALS.
- (AWS) AMERICAN WELDING SOCIETY
- (BOCA) BUILDING OFFICIALS & CODE ADMINISTRATORS.
- (ETL) ELECTRICAL TESTING LABORATORY.
- (IBC) INTERNATIONAL BUILDING CODE.
- (ICC) INTERNATIONAL CODE COUNCIL
- (ICEA) INSULATED CABLE ENGINEERS ASSOCIATION.
- (IEEE) INSTITUTE OF ELECTRICAL AND ELECTRONIC ENGINEERS.
- (NBFU) NATIONAL BOARD OF FIRE UNDERWRITERS.
- (NEC) NATIONAL ELECTRICAL CODE.
- (NEMA) NATIONAL ELECTRICAL MANUFACTURERS ASSOCIATION.
- (NESC) NATIONAL ELECTRIC SAFETY CODE.
- (NFPA) NATIONAL FIRE PROTECTION ASSOCIATION.
- (IMC) INTERNATIONAL MECHANICAL CODE
- (UL) UNDERWRITER'S LABORATORIES.
- ALL APPLICABLE LOCAL JURISDICTIONS AND GOVERNING CODES

1.2 GENERAL

A. SUBCONTRACTOR WILL PROVIDE ALL LABOR, MATERIAL, TOOLS, EQUIPMENT, TRANSPORTATION AND SERVICES NECESSARY FOR AND INCIDENTAL TO COMPLETION OF ALL WORK AS INDICATED ON DRAWINGS, SPECIFICATIONS, SCOPE OF WORK, BILL OF MATERIALS, AND ANY OTHER DOCUMENT ISSUED BY OWNER/CLIENT AND/OR L3HARRIS.

B. DRAWINGS & SPECS. ARE GENERAL DIRECTIVES FOR SCOPE OF WORK. EXACT EQUIPMENT LOCATIONS & ROUTINGS, ETC. SHALL BE GOVERNED BY FIELD CONDITIONS AND L3HARRIS INSTRUCTIONS. SUBCONTRACTOR SHALL VERIFY DIMS & LOCATIONS AND REPORT ANY DISCREPANCIES TO L3HARRIS PRIOR TO COMMENCING RELATED WORK. MINOR ERRORS OR OMISSIONS IN DRAWINGS AND SPECS DO NOT EXCUSE SUBCONTRACTOR FROM COMPLETING PROJECT AND IMPROVEMENTS IN ACCORDANCE WITH THE INTENT OF THESE DRAWINGS AND SPECIFICATIONS.

C. PRIOR TO THE SUBMISSION OF BIDS, THE BIDDING SUBCONTRACTOR SHALL VISIT THE RADIO SITE TO FAMILIARIZE WITH THE EXISTING CONDITIONS AND TO CONFIRM THAT THE WORK CAN BE ACCOMPLISHED AS SHOWN ON THE CONSTRUCTION DRAWINGS. ANY DISCREPANCY FOUND SHALL BE BROUGHT TO THE ATTENTION OF CONTRACTOR.

1.3 DRAWING USE AND INTERPRETATION

A. DRAWINGS ARE DIAGRAMMATIC AND INDICATE GENERAL ARRANGEMENT OF SYSTEMS & EQUIPMENT UNLESS INDICATED OTHERWISE BY DIMS OR DETAILS.

B. SUBCONTRACTOR IS RESPONSIBLE FOR SCHEDULING ALL INSPECTIONS AND TESTING REQUIRED FOR EACH PROJECT. 48-HOUR NOTIFICATION TO L3HARRIS IS REQUIRED FOR ALL INSPECTIONS AND TESTING. FIELD COPY OF ALL INSPECTION AND TESTING REPORTS AS WELL AS TRUCK TICKETS MUST BE SUBMITTED TO L3HARRIS WITHIN 24 HOURS OF INSPECTION OR TEST.

C. SUBCONTRACTOR IS RESPONSIBLE FOR MAINTAINING PRESENT CONDITION OF EXISTING BUILDINGS, LANDSCAPING, FENCING, EQUIPMENT, WALKS, DRIVES, AND ATTACHMENTS. IF ANY DAMAGE SHOULD OCCUR, SUBCONTRACTOR IS RESPONSIBLE TO RESTORE DAMAGE TO A BETTER OR NEW CONDITION.

D. PERMITS SHALL BE ON-SITE AT ALL TIMES DURING & AFTER CONSTRUCTION.

1.4 QUALITY

A. GENERAL - ALL MATERIALS AND EQUIPMENT SHALL BE IN ACCORDANCE WITH CONTRACT DOCUMENTS AND STANDARD PRODUCTS OF THE VARIOUS MANUFACTURERS, WITH ALL MATERIALS AND EQUIPMENT TO BE NEW, CLEAN, UNDAMAGED, AND FREE OF DEFECTS AND CORROSION.

B. PRODUCT OF AN APPROVED MANUFACTURER IS ACCEPTABLE ONLY WHEN PRODUCT COMPLIES WITH OR IS MODIFIED AS NECESSARY TO COMPLY WITH ALL REQUIREMENTS OF CONTRACT DOCUMENTS.

C. TESTING EQUIPMENT AND METHODS SHALL BE CODE AND MFGR. COMPLIANT AND ACCEPTED L3HARRIS AND OWNER/CLIENT PRIOR TO TESTING.

D. AFTER TESTING AND/OR INSPECTION BY OWNER/CLIENT OR L3HARRIS, SUBCONTRACTOR SHALL CORRECT DEFICIENCIES AND REPLACE MATERIALS & EQUIPMENT SHOWN TO BE DEFECTIVE OR UNABLE TO PERFORM AT DESIGN OR RATED CAPACITY.

E. FURNISH AND INSTALL MATERIALS AS REQUIRED FOR COMPLETE SYSTEMS, WHETHER SPECIFICALLY INDICATED OR NOT. SYSTEMS SHALL BE FULLY ASSEMBLED, TESTED, ADJUSTED, & DEMONSTRATED READY FOR OPERATION PRIOR TO OWNER'S ACCEPTANCE.

1.5 SUBMITTALS & DELIVERABLES

A. A MINIMUM OF 2 COPIES OF DEFERRED SUBMITTALS SHALL BE PROVIDED TO L3HARRIS.

B. SUBCONTRACTORS SHALL PROVIDE THE FOLLOWING APPLICABLE DELIVERABLES TO L3HARRIS:

B.1 MATERIAL TESTING OF CONCRETE, STRUCTURAL STEEL AND ANY OTHER MATERIAL USED AS REQUIRED BY GOVERNING REGULATIONS.

B.2 INSPECTION SIGN-OFFS, WITH ATTACHED TESTING & INSPECTION REPORTS

B.3 THIRD-PARTY INSPECTION

B.4 GROUNDING SYSTEM TESTING

B.5 ANTENNA SWEEP TESTING

B.6 CERTIFICATE OF AUTHENTICITY

B.7 BUILDING AND ELECTRICAL PERMITS

B.8 RELEASE OF WAIVER & LIENS

B.9 ANTENNA PACKETS (EQUIPMENT INFORMATION, PAPERS, ETC.)

B.10 WARRANTIES ON ALL ITEMS INSTALLED AND WORK PERFORMED

B.11 PHOTOGRAPHS OF SITE BEFORE, DURING, AND AFTER CONSTRUCTION, DAILY REPORTS, ALL VENDOR DATA SUBMITTALS AND O&M MANUALS ISSUED WITH INSTALLED PRODUCTS.

B.12 LIST OF SUBCONTRACTORS; SUPPLIERS; PRODUCT DATA; SHOP DRAWINGS; AND VARIOUS ADMINISTRATIVE SUBMITTALS.

B.13 SAFETY MEETING MINUTES

B.14 COMPLETED AND APPROVED FINAL WALK-THRU PUNCH-LIST

B.15 CERTIFICATE OF OCCUPANCY

C. SUBCONTRACTORS SHALL MAINTAIN A FIELD COPY OF AS-BUILT DRAWING THROUGHOUT THE PROJECT TO INDICATE INSTALLED LOCATIONS OF EQUIP. & DEVICES, ROUTING OF MAJOR INTERIOR RACEWAY, LOCATION OF CONCEALED & UNDERGROUND EQUIP & RACEWAY, ALL APPROVED MODIFICATIONS TO CONTRACT DOCS, AND DEVIATIONS. THESE DRAWINGS SHALL BE CURRENT & UPDATED DAILY. A NEW, CLEAN SET OF CONTRACT DOCUMENTS WILL BE ISSUED TO SUBCONTRACTOR NEAR COMPLETION TO TRANSFER INFORMATION FROM FIELD DRAWINGS TO NEW AS-BUILT COPY. THIS SHALL BE SUBMITTED WITH DELIVERABLES TO L3HARRIS WITH CLOSE-OUT DOCUMENTS.

1.6 MATERIALS

A. WHERE MORE THAN ONE OF ANY SPECIFIC ITEM IS REQUIRED, ALL SHALL BE OF THE SAME TYPE AND MANUFACTURER.

B. MATERIALS & EQUIPMENT SHALL BE UNDERWRITERS LABORATORIES (UL) LISTED AND LABELED, WHERE (UL) STANDARDS AND LISTINGS EXIST FOR SUCH MATERIALS OR EQUIPMENT.

1.7 CONDITION VERIFICATION

A. EXAMINE AREAS & CONDITIONS UNDER WHICH WORK IS TO BE PERFORMED, AND IDENTIFY ANY CONDITIONS DETRIMENTAL TO THE PROPER AND TIMELY COMPLETION OF WORK. DO NOT PROCEED UNTIL UNSATISFACTORY CONDITIONS HAVE BEEN CORRECTED.

1.8 EXECUTION

A. ALL WORK SHALL BE PERFORMED UNDER SUBCONTRACTOR'S DIRECT SUPERVISION, USING SUFFICIENT AND QUALIFIED PERSONNEL AS NECESSARY TO COMPLETE WORK IN ACCORDANCE WITH PROGRESS SCHEDULE. SUBCONTRACTOR SHALL ASSIGN ONE OR MORE COMPETENT SUPERVISORS WHO HAVE AUTHORITY TO ACCEPT & EXECUTE ORDERS & INSTRUCTION, AND WHO SHALL COOPERATE WITH SUBCONTRACTORS, ENGINEERS, AND L3HARRIS IN ALL MATTERS TO RESOLVE CONFLICTS AND AVOID DELAYS.

B. MATERIALS AND EQUIPMENT SHALL BE INSTALLED PER MFGR SPECS, BY MECHANICS EXPERIENCED AND SKILLED IN THEIR TRADE, IN NEAT AND WORKMANLIKE MANNER IN ACCORDANCE WITH STANDARDS OF TRADE, AND SO AS NOT TO ALTER OR VOID WARRANTY OR (UL) LISTING. INSTALLATION OF ALL WORK SHALL BE IN ACCORDANCE WITH INTENT OF CONTRACT DOCS.

1.9 COORDINATION

A. SEQUENCE, COORDINATE, AND INTEGRATE INSTALLATION OF MATERIALS & EQUIPMENT FOR EFFICIENT FLOW OF WORK IN CONJUNCTION WITH OTHER TRADES. REVIEW DRAWINGS FOR WORK OF ASSOCIATED TRADES AND REPORT AND RESOLVE ANY DISCOVERED DISCREPANCIES PRIOR TO COMMENCING WORK. COOPERATE WITH OTHER SUBCONTRACTORS AND INDIVIDUAL DISCIPLINES FOR PLACEMENT, ANCHORAGE, & ACCOMPLISHMENT OF WORK.

1.10 LAYOUT

A. INSTALL MATERIALS & EQUIPMENT LEVEL, PLUMB, PARALLEL, AND PERPENDICULAR TO OTHER BUILDING SYSTEMS AND COMPONENTS.

B. INSTALL EQUIPMENT, RACEWAYS, AND ETC. TO READILY FACILITATE SERVICING, MAINTENANCE, AND REPAIR OR REPLACEMENT OF COMPONENTS, AND TO MIN. INTERFERENCE WITH OTHER EQUIPMENT AND INSTALLATIONS.

C. PRIOR TO COMMENCING WORK, VERIFY THAT EQUIPMENT WILL ADEQUATELY FIT AND CONFORM TO MANUFACTURED SPECS AND CODE CLEARANCES AND AS INDICATED ON DRAWINGS. IF REARRANGEMENT IS REQUIRED, SUBMIT PLAN AND ELEVATION DRAWINGS OR SKETCHES INDICATING THE NEW REARRANGEMENT FOR THE ENGINEER'S APPROVAL. DO NOT REARRANGE WITHOUT EXPRESSED WRITTEN PERMISSION OF L3HARRIS.

D. PRIOR TO LAYOUT, COORDINATE SPACE FOR ELECTRICAL WIRING, STEAM AND CONDENSATE LINES, SANITARY LINES, DRAIN LINES, FIRE PROTECTION PIPING, AND SHEET METAL DUCT WORK. PROVIDE OFFSETS AS REQUIRED AVOIDING CONFLICTS. RESOLVE CONFLICTS BEFORE COMMENCING INSTALL.

1.11 MOUNTING HEIGHTS

A. INDICATED HEIGHTS ARE MEASURED FROM CENTER OF DEVICE OUTLET BOX TO FINISHED FLOOR OR GRADE U.N.O. REQUEST INSTRUCTIONS FOR MOUNTING HEIGHTS NOT INDICATED PRIOR TO INSTALLATION.

B. INSTALL CEILING MOUNTED RACEWAY, LIGHTING FIXTURES AND ALL OTHER EQUIPMENT WITH NOT LESS THAN 8'-0" CLEARANCE TO FINISHED FLOOR, UNLESS INDICATED OR APPROVED OTHERWISE, AND EXCLUDING RACEWAY AND EQUIPMENT MOUNTED ON WALLS.

C. DEVICES - SWITCHES @ 48"A.F.F. RECEPTACLES @ 18"A.F.F. THERMOSTAT @ 48"A.F.F.

1.12 HOLES, SLEEVES AND OPENINGS

A. PROVIDE HOLES, SLEEVES, & OPENINGS REQUIRED FOR COMPLETION OF WORK & RESTORE ALL DAMAGED SURFACES TO MATCH SURROUNDING SURFACES. MAINTAIN INTEGRITY OF FIRE & SMOKE RATED BARRIERS USING APPROVED FIRE STOPPING SYSTEMS. WHEN CUTTING HOLES & OPENINGS, OR INSTALLING SLEEVES, DO NOT CUT, DAMAGE OR DISTURB STRUCTURAL ELEMENTS OR REINFORCING STEEL, UNLESS APPROVED IN WRITING BY PROJECT STRUCTURAL ENG. ANY FIELD PENETRATION OF SHELTER REQUIRES SHELTER MANUFACTURER'S WRITTEN APPROVAL TO AVOID IMPACT TO WARRANTY.

B. SIZE CORE DRILLED HOLES SO THAT AN ANNULAR SPACE OF MIN. 1/4" AND MAX. 1" IS LEFT AROUND CONDUIT. WHEN OPENINGS ARE CUT IN LIEU OF CORE DRILLED, PROVIDE SLEEVE IN ROUGH OPENING. SIZE SLEEVES TO PROVIDE ANNULAR SPACE OF MIN. 1/4" AND MAX. 1" AROUND CONDUIT, PIPE, ETC. PATCH AROUND SLEEVE TO MATCH SURROUNDING SURFACES.

1.13 RACEWAY SYSTEMS

A. RACEWAY SIZING - AS REQUIRED BY NEC MIN. WITH OVERSIZED RACEWAYS AS INDICATED ON DRAWINGS. MIN. CONDUIT SIZE = 3/4" U.N.O.

B. RACEWAY ROUTING - AS REQUIRED BY JOB CONDITIONS UNLESS SPECIFIC ROUTES OR DIMENSIONED POSITIONS ARE INDICATED ON DRAWINGS. INSTALL TIGHT TO SLAB, BEAMS, AND JOISTS WHEREVER POSSIBLE. ROUTE CONDUIT PARALLEL OR PERPENDICULAR TO WALLS, CEILINGS, AND STRUCTURAL MEMBERS. INSTALL TO MAINTAIN MIN. HEADROOM AND TO PRESENT NEAT APPEARANCE. RUN PARALLEL RACEWAYS TOGETHER WITH BENDS MADE FROM SAME CENTERLINE. VERIFY EXACT LOCATIONS OF RACEWAYS, PULL BOXES, AND JUNCTION BOXES. RESOLVE CONFLICTS BEFORE INSTALLATION.

B.1 CONDUITS SHALL NOT PENETRATE STAIRWAYS, ELEVATOR SHAFTS, OR ELEVATOR MACHINE ROOM.

B.2 CONCEAL CONDUITS ABOVE SUSPENDED CEILINGS WHERE POSSIBLE.

B.3 COORDINATE CONDUIT STUB UPS WITH ROOFTOP EQUIPMENT LAYOUT.

B.4 COORDINATE INSTALLATIONS OF CONDUITS, EQUIPMENT, ETC. WITH BUILDING OWNER PRIOR TO COMMENCEMENT OF WORK.

C. CUT CONDUIT ENDS SQUARE USING SAW OR PIPE CUTTER AND REAM EACH CUT END SMOOTH. CAREFULLY MAKE CONDUIT BENDS AND OFFSETS SO THAT BOXES, AND JUNCTION BOXES. RESOLVE CONFLICTS BEFORE INSTALLATION.

C.1 CONDUITS SHALL NOT PENETRATE STAIRWAYS, ELEVATOR SHAFTS, OR ELEVATOR MACHINE ROOM.

C.2 CONCEAL CONDUITS ABOVE SUSPENDED CEILINGS WHERE POSSIBLE.

C.3 COORDINATE CONDUIT STUB UPS WITH ROOFTOP EQUIPMENT LAYOUT.

C.4 COORDINATE INSTALLATIONS OF CONDUITS, EQUIPMENT, ETC. WITH BUILDING OWNER PRIOR TO COMMENCEMENT OF WORK.

D. CUT CONDUIT ENDS SQUARE USING SAW OR PIPE CUTTER AND REAM EACH CUT END SMOOTH. CAREFULLY MAKE CONDUIT BENDS AND OFFSETS SO THAT INSIDE DIAMETER OF PIPE IS NOT REDUCED AND SO THAT LEGS ARE IN THE SAME PLANE AND PARALLEL. PROTECT STUB-UPS FROM DAMAGE, AND CAREFULLY RE-BEND WHEN NECESSARY.

E. MAKE UP RACEWAY FITTINGS TIGHT SO FINAL INSTALLATION OF RACEWAY, FITTINGS AND ENCLOSURES CONSTITUTES FIRM MECHANICAL ASSEMBLY AND CONTINUOUS ELECTRICAL CONTINUITY. PROVIDE INSULATING BUSHINGS ON CONDUIT TERMINATIONS.

F. RACEWAY CONDUIT TYPES - RIGID GALV. STEEL CONDUIT, ELECTRICAL METALLIC TUBING (EMT), FLEXIBLE STEEL CONDUIT, LIQUID-TIGHT FLEXIBLE STEEL CONDUIT, SCHEDULE 40 HEAVY WALL, AND SCHEDULE 80 EXTRA HEAVY WALL RIGID NONMETALLIC (PVC) CONDUIT, CONFORMING TO APPLICABLE ANSI, NEMA AND (UL) STANDARDS.

G. RACEWAY FITTINGS (EXCEPT RIGID NONMETALLIC CONDUIT) TO BE STEEL OR MALLEABLE IRON, AND (UL) LISTED FOR THE INTENDED APPLICATION. (EMT) FITTING TO BE COMPRESSION TYPE.

H. PROTECT RACEWAYS, ENCLOSURES & EQUIPMENT DURING CONSTRUCTION TO PREVENT ENTRY OF CONCRETE, DEBRIS & FOREIGN MATTER. FREE CLOGGED CONDUITS OF OBSTRUCTIONS OR REPLACE PRIOR TO PULLING WIRE. DO NOT PULL WIRE WITHIN BUILDING UNTIL BUILDING IS COMPLETELY ENCLOSED.

I. RIGIDLY SUPPORT RACEWAY WITH MAX. SPACING PER NEC, AND TO PREVENT DISTORTION OF ALIGNMENT DURING PULLING OPERATION. USE APPROVED HANGERS, CLAMPS, AND STRAPS FOR INDIVIDUAL RUNS. DO NOT USE PERFORATED STRAPS OR TIE WIRES. WHERE MULTIPLE PARALLEL RACEWAYS ARE RUN TOGETHER, USE TRAPEZE TYPE HANGER ARRANGEMENT MADE FROM U-CHANNEL AND ACCESSORIES, SUSPENDED BY THREADED RODS, AND ALLOW CAPACITY FOR FUTURE INSTALL OF ADDITIONAL RACEWAYS. RIGIDLY ANCHOR VERTICAL CONDUITS SERVING FLOOR- MOUNTED OR "ISLAND" TYPE EQUIPMENT MOUNTED AWAY FROM WALLS WITH METAL BRACKET OR RIGID STEEL CONDUIT EXTENSION SECURED TO FLOOR.

1.14 HANGERS AND SUPPORTS

A. SUPPORT & SECURE MATERIALS, RACEWAY, & EQUIP. TO BUILDING STRUCTURE USING HANGERS, SUPPORTS & FASTENERS SUITABLE FOR USE, MATERIALS, AND LOADS ENCOUNTERED. PROVIDE ALL NECESSARY HARDWARE. PROVIDE CONDUIT SUPPORTS AT MAX. 5' ON CENTER.

B. ATTACH OVERHEAD MOUNTED EQUIPMENT TO STRUCTURAL FRAMEWORK OR SUPPORTING METAL FRAMEWORK. DO NOT MAKE ATTACHMENTS TO STEEL ROOFING, STEEL FLOORING, OR CEILING MINERAL TILE.

C. SUPPORT WALL MOUNTED EQUIPMENT BY MASONRY, CONCRETE BLOCK, METAL FRAMING, OR SUB-FRAMING.

D. MOUNT EQUIPMENT LOCATED ON INTERIOR OR EXTERIOR BUILDING WALLS MIN. 1" AWAY FROM WALL SURFACE, USING SUITABLE SPACERS.

E. STRUCTURAL MEMBERS - DO NOT CUT, DRILL OR WELD ANY STRUCTURAL MEMBER EXCEPT AS SPECIFICALLY APPROVED BY THE ENGINEER.

F. INDEPENDENT SUPPORT - DO NOT SUPPORT MATERIALS OFF OF OTHER EQUIPMENT, PIPING, DUCTWORK OR SUPPORTS FOR SAME, REMOVABLE OR KNOCKOUT PANELS, TEMPORARY WALLS, OR PARTITIONS.

G. PROVIDE ANY ADDITIONAL STRUCTURAL SUPPORT, STEEL BRACKETS, ANGLES, FASTENERS, & HARDWARE AS REQUIRED TO ADEQUATELY SUPPORT ALL ELECTRICAL MATERIALS AND EQUIPMENT.

H. ONE HOLE STRAPS SHALL NOT BE USED FOR CONDUITS LARGER THAN 3/4".

1.15 EQUIPMENT CONNECTIONS

A. OBTAIN AND REVIEW SHOP DRAWINGS, PRODUCT DATA, AND MFGR'S INSTRUCTIONS FOR EQUIPMENT FURNISHED BY OTHERS. EXAMINE ACTUAL EQUIPMENT TO VERIFY PROPER CONNECTION LOCATIONS & REQUIREMENTS.

B. PROVIDE REQUIRED CONDUIT, BOXES, FITTINGS, WIRES, CONNECTORS, AND MISC. ACCESSORIES, ETC., AS NECESSARY TO ROUGH IN THE FINAL CONNECTIONS TO ALL EQUIPMENT REQUIRING ELECTRICAL CONNECTIONS. IN GENERAL, MOTORS AND EQUIPMENT SHALL BE WIRED IN CONDUIT TO A JUNCTION BOX (OR SAFETY SWITCH) NEAR UNIT, AND FROM THERE TO THE UNIT IN FLEXIBLE METAL OR LIQUID TIGHT FLEXIBLE STEEL CONDUIT.

C. PROVIDE PROPERLY SIZED OVERLOAD AND SHORT CIRCUIT PROTECTION FOR ALL EQUIPMENT CONNECTED. VERIFY PRIOR CONNECTIONS WITH MFGR'S PUBLISHED DIAGRAMS AND COMPLY WITH SAME. VERIFY THAT EQUIPMENT IS READY FOR ELECTRICAL CONNECTIONS, WIRING AND ENERGIZATION PRIOR TO PERFORMING SAME.

D. PROVIDE CONTROL WIRING TO REMOTE DEVICES AND EQUIPMENT AS INDICATED OR REQUIRED.

1.16 IDENTIFICATION

A. GENERAL - LOCATE NAME PLATE MARKING OR OTHER IDENTIFICATION MEANS ON OUTSIDE OF EQUIPMENT OR BOX FRONT COVERS WHEN ABOVE CEILINGS AND WHEN IN MECHANICAL OR ELECTRICAL EQUIPMENT ROOMS OR OTHER UNFINISHED AREAS, AND ON INSIDE OF FRONT COVER WHEN IN FINISHED ROOMS/ AREAS. USE CONTRACT DOCUMENT DESIGNATIONS FOR IDENTIFICATION UNLESS OTHERWISE NOTED.

B. NAMEPLATES - PROVIDE NAME PLATE ENGRAVED WITH EQUIP. DESIGNATION FOR EACH SAFETY SWITCH, PANEL BOARD, TRANSFORMER, MOTOR STARTER, AND ALL OTHER EQUIPMENT, ETC.

C. UNDERGROUND WARNING TAPE - DURING TRENCH BACK FILLING FOR EACH UNDERGROUND ELECTRICAL, TELEPHONE, SIGNAL AND COMMUNICATIONS LINE, PROVIDE A CONTINUOUS UNDERGROUND WARNING TAPE AS SPECIFIED. TYPICALLY USE 6" WIDE POLYETHYLENE TAPE PERMANENTLY BRIGHT COLORED WITH CONTINUOUS PRINT INDICATING GENERAL TYPE OF UNDERGROUND LINE BELOW AND "CAUTION". COLORS AS FOLLOWS:

C.1 RED = ELECTRIC

C.2 ORANGE = COMMUNICATIONS

REV	DESCRIPTION	DATE	BY
001	50% CD	6/22/2021	ADW
002	COMMMENTS	7/9/2021	ADW
003	COMMENTS	8/12/2021	ADW

SITE NAME:

RED PEAK

SITE ADDRESS:

UNNAMED ROAD
SUN VALLEY, NV 89433

WASHOE COUNTY TECHNOLOGY SERVICES

230 EDISON WAY
RENO, NV 90502

L3HARRIS COMMUNICATIONS SYSTEMS

1421 EAST SUNSET RD, SUITE 18
LAS VEGAS, NV 89120

COMMUNICATIONS SERVICES, INC.

14350 N. 87th ST., STE. 145
SCOTTSDALE, AZ 85260
PHONE: 480.291.6824

L3HARRIS™ COMMUNICATIONS SYSTEMS
PUBLIC SAFETY & PROFESSIONAL COMMUNICATIONS

CONTRACT
16CS02712

PRELIMINARY ENGINEERING CONSTRUCTION DRAWINGS COMPANY CONFIDENTIAL

SHEET TITLE: R777-S075
DATE: 2021-07-09
PREPARED BY: ADW COMM
VERSION 003

NEVADA SHARED RADIO SYSTEM
RED PEAK
GENERAL NOTES
PAGE GN-1

COPYRIGHT © 2021 L3HARRIS TECHNOLOGIES. ALL RIGHTS RESERVED

1.16 IDENTIFICATION (CONTINUE)

D. MARK EACH JUNCTION AND PULL BOX INDICATING SOURCE DESIGNATION AND CIRCUIT NUMBER(S) FOR THE ENCLOSED CONDUCTORS.

E. LABEL ALL WIRES AND CABLES AT EVERY POINT OF TERMINATION AND IN ALL PULL BOXES AND JUNCTION BOXES. FOR POWER CIRCUITS, APPLY WIRE TAGS INDICATING APPROPRIATE CIRCUIT OR FEEDER NUMBER TO EACH CONDUCTOR PRESENT IN DISTRIBUTION PANEL AND PANEL BOARD GUTTERS, AND TO EACH CONDUCTOR IN PULL AND JUNCTION BOXES.

F. AT COMPLETION OF PROJECT, ACCURATELY COMPLETE EACH PANEL BOARD CIRCUIT DIRECTORY CARD, IDENTIFYING LOAD SERVED OR CIRCUITS AT EXISTING PANEL BOARD, UPDATE EXISTING (OR PROVIDE NEW) CIRCUIT DIRECTORY CARD TO ACCURATELY REFLECT FINAL CONDITIONS.

1.17 SYSTEM DEMONSTRATION

A. INSTRUCT L3HARRIS'S REP. IN STARTUP, OPERATION & MAINTENANCE OF ELECTRICAL SYSTEMS & EQUIPMENT AS REQUESTED BY OWNER/CLIENT.

PART 2. EARTH WORK & ROADWAYS

2.1 EXECUTION

A. IT IS SUBCONTRACTOR'S SOLE RESPONSIBILITY TO CALL LOCAL LOCATING AUTHORITIES (OR PRIVATE LOCATING SERVICES) AND PERFORM OTHER STEPS AS REQUIRED TO VERIFY LOCATION OF UNDERGROUND UTILITIES OR LINES THAT EXIST WITHIN ENTIRE PROJECT AREA. SUBCONTRACTOR SHALL PLACE THESE ITEMS ON AS-BUILT DRAWINGS.

B. ACCESS ROAD, IF REQUIRED, SHALL BE CONSTRUCTED BEFORE ANY OTHER WORK ON SITE IS PERMITTED. BRING ROAD TO SUB-BASE COURSE TO ALLOW CONSTRUCTION TRAFFIC TO USE ROAD FOR PROJECT, AND COMPLETE ROAD AFTER CONSTRUCTION OF SITE IS SUBSTANTIALLY COMPLETE.

C. SITE AREAS AND ACCESS ROADS ARE TO BE CONSTRUCTED WITH POSITIVE DRAINAGE FLOW AWAY FROM SITE AND EQUIPMENT. ANY DISCREPANCIES IN DRAWINGS OR SPECIFICATIONS MUST BE BROUGHT TO ATTENTION OF L3HARRIS IMMEDIATELY.

D. SUBCONTRACTOR SHALL GRUB SITE AREA AND ANY ACCESS ROAD, CLEARING AND REMOVING A MIN. OF 6" TO ACHIEVE A STABLE SUB-BASE TO ACCEPT FILL OR OTHER MATERIAL SPECIFIED FOR SITE AND NOT REUSED IN ANY PART OF THIS PROJECT.

E. SOIL STERILIZER SHALL BE APPLIED TO ALL GRAVEL SURFACES, BE EPA REGISTERED LIQUID COMPOSITION AND OF PRE-EMERGENT DESIGN. PRODUCT LABEL AND INFORMATION WILL BE GIVEN TO L3HARRIS.

2.2 FILL

A. GRAVEL FILL SHALL BE WELL-GRADED, HARD, DURABLE, NATURAL SAND AND GRAVEL, FREE FROM ICE AND SNOW, ROOTS SOD RUBBISH, AND OTHER DELETERIOUS OR ORGANIC MATTER. MATERIAL SHALL CONFORM TO THE FOLLOWING GRADATION REQUIREMENTS:

SIEVE NUMBER	% PASSING BY WEIGHT
4"	100
1/2"	50 - 85
#4	40 - 75
#10	30 - 60
#40	10 - 30
#10	5 - 20
#200	0 - 8

B. FILL DIRT SHALL BE CLEAN & NATURAL, & FREE FROM DELETERIOUS MAT, ROOTS, ICE, SNOW, SOD, AND RUBBISH. A COPY OF ALL DELIVERY TICKETS WILL BE SUBMITTED TO L3HARRIS WITHIN 24 HOURS FROM DELIVERY.

C. COMPACTING OF SITE AREAS SHALL BE ACCOMPLISHED BY MECHANICAL MEANS. LARGER AREAS SHALL BE COMPACTED BY POWER-DRIVEN HAND HELD TAMPER. COMPACTED AREAS SHALL BE AT 90% IN ACCORDANCE WITH ASTMD-1557 METHOD C AND TESTED BY INDEPENDENT LABORATORY. IT IS RESPONSIBILITY OF SUBCONTRACTOR TO SCHEDULE TESTING. SCHEDULING FOR A PROCTOR WILL BE SUBCONTRACTOR'S RESPONSIBILITY, AND MUST BE DONE IN TIMELY FASHION TO ASSURE PROJECT WILL NOT BE DELAYED.

D. FILL AND STONE WILL BE PLACED IN MAX. 8" LIFTS PRIOR TO COMPACTING.

E. TRENCHES SHALL TYPICALLY HAVE 6" BASE OF CLEAN SAND FILL TO ACCEPT CONDUITS, AND ANOTHER 12" OF CLEAN SAND FILL ON TOP OF CONDUITS UNLESS SPECIFIED OTHERWISE. REMAINDER OF TRENCH SHALL HAVE CLEAN COMPATIBLE FILL PLACED IN MAX. LIFTS OF 8" & MECHANICALLY COMPACTED TO 95% DENSITY. METALLIC WARNING TAPE SHALL BE PLACED ALONG ENTIRE TRENCH.

F. FINISHED GRADE, INCLUDING TOP SURFACE COURSE, SHALL EXTEND MIN. 12" BEYOND SITE FENCE AND SHALL COVER AREA AS INDICATED.

2.3 ANTI-EROSION

A. DITCHES - USE RIP-RAP IN AREAS WITH SLOPE GREATER THAN 2:1 IN ENTIRE DITCH, AND FOR 6' IN ALL DIRECTIONS AT CULVERT OPENINGS & WHERE INDICATED ON PLANS.

A.1 SUBCONTRACTOR SHALL PROTECT ALL AREAS FROM WASHOUTS AND SOIL EROSION. EROSION CONTROL SHALL BE PLACED AT INLET APPROACH TO ALL NEW OR EXISTING CULVERTS.

A.2 SEED, FERTILIZER, AND STRAW COVER SHALL BE APPLIED TO ALL OTHER DISTURBED AREAS, DITCHES, DRAINAGE, AND SWELLS NOT OTHERWISE RIP-RAPPED. SEED AND FERTILIZER SHALL BE APPLIED TO SURFACE CONDITIONS THAT WILL ENCOURAGE ROOTING. PREPARE SURFACE PROPERLY TO ACCEPT SEEDS. SOW SEEDS IN TWO OPPOSITE DIRECTIONS IN TWICE THE QUANTITY RECOMMENDED BY SEED PRODUCER.

A.3 SUBCONTRACTOR IS RESPONSIBLE TO ENSURE GROWTH OF SEEDED AND LANDSCAPED AREAS BY WATERING, STRAW, MULCH, NET, AND APPROPRIATE LANDSCAPING METHODS.

B. AREAS MUST HAVE SUSTAINED GROWTH BY COMPLETION OF PROJECT

PART 3. CONCRETE (REFER TOWER DESIGN BY SABRE FOR TOWER FOUNDATION)

3.1 CODES AND STANDARDS - SEE T-1, CODES AND REGULATIONS

A. CONCRETE TO BE OF GRADE 4,000 PSI, TYP. U.N.O

B. ALL MATERIAL, LABOR, AND METHODS SHALL CONFORM TO APPLICABLE ASTM AND ACI STANDARDS AND REQUIREMENTS. PERFORM ALL CONCRETE CONSTRUCTION IN ACCORDANCE WITH ACI 301 AND 318.

C. PERFORM CONCRETE DRILLED PIER CONSTRUCTION IN ACCORDANCE WITH ACI 336.1 AND 336.3R.

3.2 INSPECTIONS

A. SUBCONTRACTOR SHALL SCHEDULE INSPECTIONS WITH TESTING LABORATORY, SPECIAL INSPECTORS, & BUILDING OFFICIAL INSPECTORS AND INFORM L3HARRIS WITHIN 24 HRS. OF INSPECTION OR TEST.

B. TESTING WILL INCLUDE SLUMP, AIR ENTRAINMENT, TEMPERATURE, AND TEST CYLINDERS. TOTAL OF 4 CYLINDERS SHALL BE TAKEN DURING EACH POUR OR FOR EACH 50 YARDS IF POUR IS OVER 50 YARDS. THE 1ST CYLINDER WILL BE BROKEN AT 7 DAYS, 2ND AND 3RD AT 28 DAYS. LAST CYLINDER WILL BE KEPT SEPARATELY FOR FUTURE USE IF NECESSARY.

3.3 REINFORCEMENT

A. METAL REINFORCEMENT SHALL CONFORM TO ASTM A615 GRADE 60. WELDING OF REINFORCEMENT IS PROHIBITED. EMBEDDED METAL SHALL CONFORM TO ASTM A36.

B. REINFORCING SHALL BE DETAILED, BOLSTERED AND SUPPORTED IN ACCORDANCE WITH ACI 315, 318 AND PUBLICATION SP-66.

C. REINFORCING SHALL BE SECURELY ANCHORED TO FORMS AND SPACED FROM FORMS AS FOLLOWS (UNLESS NOTED OTHERWISE):

CONC. NOT EXPOSED TO EARTH /WEATHER:	
SLABS, JOISTS OR WALLS	3/4"
COLUMNS, BEAMS OR GIRDERS	1-1/2"
CONC. EXPOSED TO EARTH/WEATHER:	
#6 AND LARGER	1-1/2"
#5 AND SMALLER	2"
WALLS, PIERS AND COLUMNS	2"
FOOTINGS	3"
DRILLED PIERS	4"

ALL OTHER PER LATEST EDITION OF ACI 318.

D. PLACE SINGLE CURTAINS OF REINFORCEMENT IN CENTER OF WALLS & SLABS UNLESS OTHERWISE SHOWN.

E. ALL SPLICES IN CONTINUOUS REINFORCING BARS SHALL HAVE THE FOLLOWING MIN. LAP LENGTH:

#4:	24"	#7:	54"
#5:	31"	#8:	62
#6:	37"	#9:	70"

F. FOOTING DOWELS (WHERE REQUIRED) SHALL HAVE LAP LENGTH AS SPECIFIED ABOVE OR SHALL HAVE STANDARD HOOK EMBEDDED TO BOTTOM OF FOOTING.ALL CONCRETE SHALL BE MECHANICALLY VIBRATED DURING PLACEMENT TO ASSURE PROPER CONSOLIDATION, EXCEPT THAT SLABS ON GRADE NEED BE VIBRATED ONLY AROUND UNDER-FLOOR DUCTS, ETC. MAXIMUM SLUMP 5" FOR CONCRETE WITH OUT PLASTICIZER. IF PLASTICIZER IS USED, A HIGHER FINAL SLUMP MAY BE ALLOWED UPON STRUCTURAL ENGINEER'S APPROVAL. UNLESS APPROVED OTHERWISE IN WRITING BY THE RECORD ENGINEER.

G. ALL CONCRETE SLABS ON GRADE SHALL BE BOUND BY CONTROL JOINTS (KEYED OR SAW CUT), AS SHOWN ON THE FOUNDATION PLAN, SUCH THAT THE ENCLOSED AREA DOES NOT EXCEED 225 SQUARE FEET. KEYED CONTROL JOINTS NEED ONLY OCCUR AT EXPOSED EDGES DURING POURING, ALL OTHER JOINTS MAY BE SAW CUT.

H. VERTICAL REINFORCING: PLACE 1 # 5 IN CENTER OF GROUTED CELL AT CENTER OF WALL, CONTINUOUS FOR FULL HEIGHT OF WALL AT ALL CORNERS, INTERSECTIONS, WALL ENDS, BEAM BEARINGS, JAMBS, EACH SIDE OF CONTROL JOINTS AND AT INTERVALS NOT TO EXCEED 48" O.C. UNLESS NOTED OTHERWISE. TIE AT 8'-0" VERTICALLY, WITH SINGLE WIRE LOOP TIE BY A.A. WIRE PRODUCTS COMPANY. LAP SPLICES SHALL CONFORM TO THE SCHEDULE UNDER "MASONRY" SECTION. DOWEL ALL VERTICAL REINFORCING TO FOUNDATION WITH DOWELS TO MATCH SIZE AND SPACING OF VERTICAL REINFORCING.

I. HORIZONTAL REINFORCING: 1 #5 IN MINIMUM 8" DEEP GROUTED CONTINUOUS BOND BEAM AT TOP OF PARAPET OR TOP OF A FREESTANDING WALL. PLACE THESE BARS CONTINUOUS THRU CONTROL JOINTS PER TYPICAL DETAIL. PROVIDE BENT BARS PER TYPICAL DETAILS, TO MATCH HORIZONTAL BOND BEAM REINFORCING, AT CORNERS AND WALL INTERSECTION TO MAINTAIN BOND BEAM CONTINUITY. LAP SPLICES SHALL BE AS PER SCHEDULE UNDER "MASONRY" SECTION DO NOT SPLICE WITHIN 8'-0" OF CONTROL JOINTS. PLACE STANDARD WEIGHT (NO. 9 GAGE WIRE) DUR-O-WAL OR DUR-O-WIRE (OR EQUIVALENT) LADDER TYPE JOINT REINFORCEMENT AT 16" O.C. IN ALL MASONRY WALLS.

J. PROVIDE CORNER BARS AT INTERSECTING CORNERS OF WALLS & FOOTINGS. USE SAME SIZE & SPACING OF HORIZ. REINFORCING AS SPECIFIED.

K. ANCHOR RODS NUTS & WASHERS SHALL CONFORM TO ASTM A307 OR A36

L. FLY ASH - IF PERMITTED BY OWNER THEN IT SHALL BE LIMITED TO 20% IF CEMENTITIOUS MATERIALS AND SHALL HAVE A REPLACEMENT FACTOR OF 1.2 RELATIVE TO CEMENT REPLACED.

3.4 GENERAL

A. CONCRETE SUPPLIER SHALL HAVE APPROVED PLASTICIZER ON TRUCK TO AID POURING & PLACING OF PIERS & FOUNDATIONS.

B. AIR ENTRAINING AGENT SHALL BE USED IN CONCRETE EXPOSED TO FREEZING TEMPERATURES.

C. SUBCONTRACTOR IS RESPONSIBLE FOR EMBEDMENT LOCATIONS, SIZES, AND PROPER ANCHORING TO HOLD ITEMS IN PLACE ACCURATELY.

D. SUBCONTRACTOR SHALL SUPPLY AND USE APPROVED FORM-RELEASING AGENT ON ALL FORMS.

E. ANY ATTACHMENT TO EXISTING CONCRETE AREAS WILL BE DONE WITH SMOOTH DOWELS AS SPECIFIED AND APPROVED BONDING AGENT

F. EXPOSED CONCRETE WILL HAVE UNIFORM FINISH AND SLOPED FOR DRAINAGE UNLESS OTHERWISE NOTED. CONCRETE STOOPS, LANDINGS, AND WALKWAYS SHALL BE BROOM FINISHED.

G. SUBCONTRACTOR SHALL PROTECT CONCRETE FROM ADVERSE WEATHER CONDITIONS, PREMATURE DRYING & MECHANICAL INJURY TO ENSURE PROPER CURING.

G.1 SUBCONTRACTOR SHALL BE RESPONSIBLE FOR USE & CONTROL OF MECHANICAL EQUIP. TO ENSURE PROPER PLACEMENT OF CONCRETE TO PREVENT ANY VOIDS OR HONEYCOMBS.

PART 4. FOUNDATION / FOOTING NOTES

A. ALLOWABLE SOIL BEARING PRESSURE USED IN DESIGN IS AS NOTED IN THE CIVIL/STRUCTURAL DESIGN CRITERIA PER PROJECT SITE SPECIFIC GEOTECHNICAL INVESTIGATION REPORT.

B. ALL FOOTINGS SHALL BEAR INTO ORIGINAL (IN-SITU) UNDISTURBED EARTH OR UPON ENGINEERED NON-FROST SUSCEPTIBLE GRANULAR FILL PER ENGINEER'S SPECIFICATIONS. SUCH FILL SHALL BE COMPACTED AND PLACED IN LIFTS ACCORDING TO SPECIFICATIONS.

C. NO CONCRETE SHALL BE PLACED IN STANDING WATER OR UPON FROZEN GROUND

D. WHERE PLACING NEW FOOTING, FOUNDATION, CMU OR SLABS AGAINST EXISTING CONCRETE OR CMU CONSTRUCTION:

D.1 BEFORE PLACING NEW CONCRETE OR CMU AGAINST EXISTING CONCRETE OR CMU, THOROUGHLY CLEAN EXISTING CONCRETE OR CMU SURFACES AND APPLY FRESH CONCRETE-TO-EXISTING CONCRETE BONDING AGENT IN ACCORDANCE WITH MFR'S RECOMMENDATIONS.

D.2 DRILL INTO EXISTING COMPETENT CONCRETE OR CMU A MIN. OF 6 5/8" AND ADHESIVE ANCHOR (SIMPSON EPOXY-TIE, HILTI HVA/HIT/HSE OR APPROVED EQUAL) REBAR DOWELS TO MATCH LOCATIONS AND SPACINGS OF THE NEW CONCRETE REINFORCEMENT (HORIZONTAL AND/OR VERTICAL) AS SPECIFIED.

D.3 WHEN EXCAVATING ADJACENT TO EXISTING FOOTINGS, TAKE CARE TO NOT UNDERMINE EXISTING FOOTINGS WITH EXCAVATIONS STEEPER THAN 1:1 FROM TOE OF EXISTING FOOTINGS. TIE INTO WITH NEW AS SPECIFIED; AND/OR EXTEND ANY EXISTING FOUNDATION DRAINAGE SYSTEMS AS

D.4 POST DRILLED ANCHOR BOLTS SHALL BE STAINLESS STEEL THREADED RODS WITH STAINLESS STEEL NUT AND WASHER UNLESS OTHERWISE SPECIFIED. UNLESS OTHERWISE SPECIFIED, MINIMUM DRILL/EMBEDMENT DEPTH (WITH A 4" MIN. EDGE DISTANCE) SHALL BE:

DIAMETER (IN)	DEPTH (IN.)
3/8	3-1/2
1/2	4-5/8
5/8	5
3/4	6-5/8
7/8	10
1	12-1/4

E. SUBCONTRACTOR SHALL SUPPLY AND USE APPROVED FORM-RELEASING AGENT ON ALL FORMS.

F. ANY ATTACHMENT TO EXISTING CONCRETE AREAS WILL BE DONE WITH SMOOTH DOWELS AS SPECIFIED AND APPROVED BONDING AGENT

G. EXPOSED CONCRETE WILL HAVE UNIFORM FINISH AND SLOPED FOR DRAINAGE UNLESS OTHERWISE NOTED. CONCRETE STOOPS, LANDINGS, AND WALKWAYS SHALL BE BROOM FINISHED.

H. SUBCONTRACTOR SHALL PROTECT CONCRETE FROM ADVERSE WEATHER CONDITIONS, PREMATURE DRYING & MECHANICAL INJURY TO ENSURE PROPER CURING.

H.1 SUBCONTRACTOR SHALL BE RESPONSIBLE FOR USE & CONTROL OF MECHANICAL EQUIP. TO ENSURE PROPER PLACEMENT OF CONCRETE TO PREVENT ANY VOIDS OR HONEYCOMBS.

PART 5. MASONRY NOTES (NOT USED)

PART 6. DRYPACK

A. DRYPACK SHALL BE 5,000 PSI NON-SHRING GROUT, FIVE STAR OR EQUIVALENT. INSTALL DRYPACK UNDER BEARING PLATES BEFORE FRAMING MEMBER IS INSTALLED. AT COLUMNS, INSTALL DRYPACK UNDER BASEPLATES AFTER COLUMN HAS BEEN PLUMBED BUT PRIOR TO FLOOR OR ROOF INSTALLATION.

PART 7. STRUCTURAL STEEL & MISCELLANEOUS METALS

7.1 CODES AND STANDARDS - SEE T-1, CODES AND REGULATIONS

A. OF PARTICULAR RELEVANCE: AISC, ASTM, AWS AND LOCAL/GOVERNING JURISDICTION

7.2 MATERIALS

A. ALL STRUCTURAL STEEL SHALL BE ASTM A992 (FY = 50 KSI).

B. ALL CHANNELS, ANGLES, AND PLATES SHALL BE ASTM A36 (FY = 36 KSI).

C. ALL PIPE STEEL SHALL BE ASTM A501 (FY = 36 KSI) OR ASTM A53, TYPE E OR S, GRADE B (FY = 35 KSI). (NOTE: ALL PLATE IN MOMENT CONNECTIONS, BRACED FRAMES AND WHERE OTHERWISE NOTED SHALL BE FY = 50 KSI STEEL).

D. ALL TUBE STEEL SHALL BE ASTM A500 GRADE B (FY = 46 KSI).

E. REFER TOWER DESIGN BY SABRE FOR TOWER ANCHOR BOLTS SPECS REQUIREMENTS.

F. ALL CONSTRUCTION PER LATEST AISC HANDBOOK.

G. ALL EXPANSION AND EPOXY BOLTS TO HAVE I.C.C. RATING FOR MATERIAL INTO WHICH INSTALLATION TAKES PLACE.

H. ALL BOLTS, ANCHOR BOLTS, EXPANSION BOLTS, ETC. SHALL BE INSTALLED WITH STEEL WASHERS AT FACE OF WOOD OR AT SLOTTED HOLES IN STEEL SECTIONS.

I. ALL HIGH STRENGTH BOLTING SHALL BE INSPECTED BY AN INDEPENDENT TESTING LABORATORY.

J. ALL WELDING SHALL BE PERFORMED BY WELDERS HOLDING VALID CERTIFICATES AND HAVING CURRENT EXPERIENCE IN THE TYPE OF WELD SHOWN ON THE DRAWINGS OR NOTES. CERTIFICATES SHALL BE THOSE ISSUED BY AN ACCEPTED TESTING AGENCY.

K. ALL WELDING DONE BY E70 SERIES LOW HYDROGEN RODS UNLESS NOTED OTHERWISE. FOR GRADE 60 REINFORCING BARS, USE E90 SERIES.

L. ALL WELDING PER LATEST AMERICAN WELDING SOCIETY STANDARDS, (EXCEPT STEEL JOISTS AND JOIST GIRDERS SHALL COMPLY WITH SJI STANDARDS). THESE DRAWINGS DO NOT DISTINGUISH BETWEEN SHOP AND FIELD WELDS; THE SUBCONTRACTOR MAY SHOP WELD OR FIELD WELD AT HIS DISCRETION. SHOP WELDS AND FIELD WELDS SHALL BE SHOWN ON THE SHOP DRAWINGS SUBMITTED FOR REVIEW. ALL FULL (COMPLETE) PENETRATION WELDS SHALL BE TESTED AND CERTIFIED BY AN INDEPENDENT TESTING LABORATORY. WHEN STRUCTURAL STEEL IS FURNISHED TO A SPECIFIED MINIMUM YIELD POINT GREATER THAN 36 KSI, THE ASTM OR OTHER SPECIFICATION DESIGNATION SHALL BE INCLUDED NEAR THE ERECTION MARK ON EACH SHIPPING ASSEMBLY OR IMPORTANT CONSTRUCTION COMPONENT, OVER ANY SHOP COAT OF PAINT, PRIOR TO SHIPMENT FROM THE FABRICATOR'S PLANT.

REV	DESCRIPTION	DATE	BY
001	50% CD	6/22/2021	ADW
002	COMMMENTS	7/9/2021	ADW
003	COMMENTS	8/12/2021	ADW

SITE NAME:
RED PEAK
SITE ADDRESS:
UNNAMED ROAD
SUN VALLEY, NV 89433

WASHOE COUNTY TECHNOLOGY SERVICES
230 EDISON WAY
RENO, NV 90502

L3HARRIS COMMUNICATIONS SYSTEMS
1421 EAST SUNSET RD, SUITE 18
LAS VEGAS, NV 89120

COMMUNICATIONS SERVICES, INC.
14350 N. 87th ST., STE. 145
SCOTTSDALE, AZ 85260
PHONE: 480.291.6824

L3HARRIS™ COMMUNICATIONS SYSTEMS
PUBLIC SAFETY & PROFESSIONAL COMMUNICATIONS

CONTRACT 16CS02712

PRELIMINARY ENGINEERING CONSTRUCTION DRAWINGS COMPANY CONFIDENTIAL

SHEET TITLE: R777-S075
DATE: 2021-07-09
PREPARED BY: ADW COMM
VERSION 003

NEVADA SHARED RADIO SYSTEM
RED PEAK
GENERAL NOTES
PAGE GN-2

COPYRIGHT © 2021 L3HARRIS TECHNOLOGIES. ALL RIGHTS RESERVED

Exhibit B

PART 8. WOOD: (NOT USED)

PART 9. ANTENNAS AND CABLES

9.1 PROCESS

A. SUBCONTRACTOR SHALL RUN LINES AND CONDUITS IN NEAT, ORDERLY AND STRAIGHT FASHION PROVIDING ANCHORING AS RECOMMENDED BY MANUFACTURER AND WHERE NECESSARY TO SUPPORT LINES PROPERLY, AND TO RESIST LATERAL WIND & SEISMIC LOADS AS REQUIRED BY IBC AND ASCE.

B. THE FOLLOWING TABLE WILL BE USED TO DETERMINE MIN. RADIUS OF EACH CABLE:

ANDREW BENDING RADIUS	DIAM. OF CABLE	CABLE TYPE
5"	3/8"	BBDGE CAT5E
1"	1/4"	FSJ1
1.25"	1/2"	FSJ4
5"	1/2"	LDF4
10"	7/8"	LDF5
15"	1-1/4"	LDF6
20"	1-5/8"	LDF7
24"	2-1/4"	LDF12

9.2COAXIAL CABLE

A. COAXIAL CABLE SIZE SHALL BE AS SHOWN ON DRAWINGS.

B. COAXIAL CABLE SHALL BE SUPPORTED INSIDE MONOPOLES WITH "KELLEM" GRIP TYPE PRODUCTS.

C. COAXIAL CABLES ON OPEN WAVEGUIDES AND ICE BRIDGES SHALL BE SECURE & SUPPORTED AS INDICATED ON DRAWINGS.

D. COAXIAL CABLES SHALL BE GROUNDED TO GROUND BAR AT ANTENNAS USING GROUNDING KITS AS SPECIFIED ON DRAWINGS.

D.1 COAXIAL CABLES SHALL BE GROUNDED TO GROUND BAR AT BOTTOM OF TOWER OR MONOPOLE USING KITS SPECIFIED ON DRAWINGS.

D.2 COAXIAL CABLES SHALL BE GROUNDED TO GROUND BAR AT BULKHEADS USING GROUNDING KITS AS SPECIFIED ON DRAWINGS.

9.3CABLE TRAY

A. PROVIDE COMPLETE CABLE TRAY SYSTEM WITH BENDS, FITTINGS, ACCESSORIES, ETC. AS REQUIRED.

B. DESCRIPTION--ALUMINUM ALLOY CONSTRUCTION. TYPE--LADDER WITH 18" MAX. SPACING. DEPTH--MIN. 4". WIDTH--AS INDICATED ON DRAWINGS (MIN. 12" HORIZ. RUNS, MIN. 6" VERTICAL RUNS). SUPPORT SPAN-8' MIN. UNLESS

PART 10. ELECTRICAL CONDUIT IN CONCRETE SLABS:

A. ELECTRICAL CONDUIT SHALL BE RIGID STEEL CONDUIT OR FLEXIBLE PLASTIC CONDUIT. ALUMINUM CONDUIT IS PROHIBITED.

B. CONDUIT WITH A MAXIMUM OUTSIDE DIAMETER OF 1/6 TIMES THE SLAB THICKNESS MAY BE EMBEDDED IN ONE LAYER AT THE MID-DEPTH OF SLABS.

C. MINIMUM CLEAR DISTANCE BETWEEN CONDUITS SHALL BE 3 TIMES CONDUIT DIAMETER.

D. CONDUIT SHALL BE FIRMLY CHAIRED AND TIED TO PREVENT DISPLACEMENT DURING POURING.

E. PLACE #3 AT 12 INCHES ADDITIONAL REINFORCING ABOVE AND BELOW, PERPENDICULAR TO THE CONDUIT. THE ADDED REINFORCING SHALL EXTEND 1'-0" PAST THE CONDUIT ON BOTH SIDES.

F. FOR CONDUIT PLACED IN SLABS ON METAL DECKING, CONDUIT SHALL RUN IN THE METAL DECK FLUTES PER THE TYPICAL CONDUIT IN SLAB ON METAL DECK DETAIL.

PART 11: LATERAL PRESSURE ON SUBGRADE WALLS:

A. THE DESIGN PRESSURES FOR SUBGRADE WALLS ARE BASED ON A "DRAINED" CONDITION. SEE CIVIL AND MECHANICAL DRAWINGS FOR SUBGRADE DRAINAGE SYSTEM. SEE GEOTECHNICAL REPORT FOR COMPACTION REQUIREMENTS AT SUBGRADE WALLS. SUBGRADE WALLS AND SUPPORTING SLABS SHALL HAVE ATTAINED THEIR FULL CONCRETE STRENGTH BEFORE PLACING ANY BACKFILL. THE CONTRACTOR SHALL PROVIDE TEMPORARY BRACES FOR WALLS IF BACKFILL IS PLACED BEFORE WALLS AND SLABS ACHIEVE FULL CONCRETE STRENGTH.

PART 12: SHOP DRAWINGS:

A. SHOP DRAWINGS SHALL BE SUBMITTED FOR ALL STRUCTURAL ITEMS IN ADDITION TO ITEMS REQUIRED BY ARCHITECTURAL SPECIFICATIONS.

B. THE CONTRACTOR SHALL REVIEW ALL SHOP DRAWINGS PRIOR TO SUBMITTAL. ITEMS NOT IN ACCORDANCE WITH CONTRACT DOCUMENTS SHALL BE FLAGGED UPON HIS REVIEW.

C. VERIFY ALL DIMENSIONS WITH ARCHITECT AND ALL FINISHED GRADE WITH CIVIL DRAWINGS.

D. ANY CHANGES, SUBSTITUTIONS, OR DEVIATIONS FROM CONTRACT DOCUMENTS SHALL BE CLOUDED BY MANUFACTURER OR FABRICATOR. ANY OF THE AFOREMENTIONED WHICH ARE NOT CLOUDED OR FLAGGED BY SUBMITTING PARTIES, SHALL NOT BE CONSIDERED APPROVED AFTER ENGINEER'S REVIEW, UNLESS NOTED ACCORDINGLY.

E. THE ENGINEER HAS THE RIGHT TO APPROVE OR DISAPPROVE ANY CHANGES TO CONTRACT DOCUMENTS AT ANYTIME BEFORE OR AFTER SHOP DRAWING REVIEW.

F. THE SHOP DRAWINGS DO NOT REPLACE THE CONTRACT DOCUMENTS. ITEMS OMITTED OR SHOWN INCORRECTLY AND ARE NOT FLAGGED BY THE STRUCTURAL ENGINEER OR ARCHITECT ARE NOT TO BE CONSIDERED CHANGES TO CONTRACT DOCUMENTS. IT IS THE CONTRACTOR'S RESPONSIBILITY TO MAKE SURE ITEMS ARE CONSTRUCTED TO CONTRACT DOCUMENTS.

G. THE ADEQUACY OF ENGINEERING DESIGNS AND LAYOUT PERFORMED BY OTHERS RESTS WITH THE DESIGNING OR SUBMITTING AUTHORITY.

H. REVIEWING IS INTENDED ONLY AS AN AID TO THE CONTRACTOR IN OBTAINING CORRECT SHOP DRAWINGS. RESPONSIBILITY FOR CORRECTNESS SHALL REST WITH THE CONTRACTOR.

I. DEFERRED SUBMITTALS: (IBC 106.3.4.2)

J. FOR THE PURPOSES OF THIS SECTION, DEFERRED SUBMITTALS ARE DEFINED AS THOSE PORTIONS OF THE DESIGN WHICH ARE NOT SUBMITTED AT THE TIME OF THE APPLICATION AND WHICH ARE TO BE SUBMITTED TO THE BUILDING OFFICIAL WITHIN A SPECIFIED PERIOD.

K. DEFERRAL OF ANY SUBMITTAL ITEMS SHALL HAVE PRIOR APPROVAL OF THE BUILDING OFFICIAL. THE ARCHITECT OR ENGINEER OF RECORD SHALL LIST THE DEFERRED SUBMITTALS ON THE PLANS AND THE OWNER/CONTRACTOR SHALL SUBMIT THE DEFERRED SUBMITTAL DOCUMENTS FOR REVIEW BY THE BUILDING OFFICIAL.

L. SUBMITTAL DOCUMENTS FOR DEFERRED SUBMITTAL ITEMS SHALL BE SUBMITTED TO THE ARCHITECT OR ENGINEER OF RECORD WHO SHALL REVIEW THEM AND FORWARD THEM TO THE BUILDING OFFICIAL WITH A NOTATION INDICATING THAT THE DEFERRED SUBMITTAL DOCUMENTS HAVE BEEN REVIEWED AND THAT THEY HAVE BEEN FOUND TO BE IN GENERAL CONFORMANCE WITH THE DESIGN OF THE BUILDING. THE DEFERRED SUBMITTAL ITEMS SHALL NOT BE INSTALLED UNTIL THEIR DESIGN AND SUBMITTAL DOCUMENTS HAVE BEEN APPROVED BY THE BUILDING OFFICIAL.

PART 13: DEFERRED SUBMITTAL ITEMS:

A. ENTIRE CONTRACT DOCUMENTS SHALL BE USED TO BUILD BUILDING. SOME CRITICAL ITEMS REQUIRED BY OTHER DISCIPLINES MAY NOT BE SHOWN ON STRUCTURAL DRAWING (i.e. PRE-FABRICATED SHELTER, STEEL TOWER, PRE-ENGINEERED STRUCTURE, RF DESIGN, MECHANICAL AND PLUMBING LOADS, SUPPORT PLATES ETC.)

B. ITEMS SHOWN BY OTHER DISCIPLINES WITH REFERENCE TO THESE DRAWING BUT NOT SHOWN IN THIS SET SHALL BE CONSIDERED DESIGN BUILD ITEMS. SUB-CONTRACTOR SHALL SUBMIT DESIGN BY OTHERS FOR REVIEW.

C. THE STRUCTURAL CONSTRUCTION DOCUMENTS REPRESENT THE FINISHED STRUCTURE. THEY DO NOT INDICATE THE METHOD OF CONSTRUCTION. THE CONTRACTOR SHALL PROVIDE ALL MEASURES NECESSARY TO PROTECT THE STRUCTURE DURING CONSTRUCTION. SUCH MEASURES SHALL INCLUDE, BUT NOT BE LIMITED TO, BRACING, SHORING FOR LOADS DUE TO CONSTRUCTION EQUIPMENT, ETC. THE STRUCTURAL ENGINEER SHALL NOT BE RESPONSIBLE FOR THE CONTRACTOR'S MEANS, METHODS, TECHNIQUES, SEQUENCES FOR PROCEDURE OF CONSTRUCTION, OR THE SAFETY PRECAUTIONS AND THE PROGRAMS INCIDENT THERETO (NOR SHALL OBSERVATION VISITS TO THE SITE INCLUDE INSPECTION OF THESE ITEMS).

D. CONSTRUCTION MATERIALS SHALL BE SPREAD OUT IF PLACED ON FRAMED CONSTRUCTION. LOAD SHALL NOT EXCEED THE DESIGN LIVE LOAD PER SQUARE FOOT.

E. WHERE REFERENCE IS MADE TO VARIOUS TEST STANDARDS FOR MATERIALS, SUCH STANDARDS SHALL BE THE LATEST EDITION AND/OR ADDENDA.

F. ESTABLISH AND VERIFY ALL OPENINGS AND INSERTS FOR ARCHITECTURAL, MECHANICAL, PLUMBING AND ELECTRICAL WITH APPROPRIATE TRADES, DRAWINGS AND SUBCONTRACTORS PRIOR TO CONSTRUCTION.

G. OPTIONS ARE FOR CONTRACTOR'S CONVENIENCE. IF HE CHOOSES AN OPTION, CONTRACTOR SHALL BE RESPONSIBLE FOR ALL NECESSARY CHANGES AND SHALL COORDINATE ALL DETAILS.

H. NOTES AND DETAILS ON DRAWINGS SHALL TAKE PRECEDENCE OVER GENERAL STRUCTURAL NOTES AND TYPICAL DETAILS. WHERE NO DETAILS ARE SHOWN, CONSTRUCTION SHALL CONFORM TO SIMILAR WORK ON THE PROJECT.

I. ALL DIMENSIONS SHOWN (INCLUDING ELEVATIONS) ON STRUCTURAL DRAWINGS ARE TO ASSIST CONTRACTOR IN VERIFICATION. SCALING DIMENSIONS FROM DRAWINGS IS NOT PERMITTED. LOCATION OF ALL ITEMS SHALL BE DETERMINED BY DIMENSIONS OR NOTES ONLY; DO NOT USE GRAPHIC APPEARANCE TO ASSUME SPECIFIC LOCATIONS.

J. CONTRACTOR SHALL BE RESPONSIBLE FOR VERIFICATION OF ALL DIMENSIONS WITH DRAWINGS AND FINISHED GRADE WITH CIVIL DRAWINGS PRIOR TO START OF CONSTRUCTION. RESOLVE ANY DISCREPANCY WITH THE RECORD ENGINEER.

K. TYPICAL DETAILS MAY NOT NECESSARILY BE CUT ON PLANS, BUT APPLY UNLESS NOTED OTHERWISE.

L. WHERE DISCREPANCIES OCCUR BETWEEN PLANS, DETAILS, GENERAL STRUCTURAL NOTES AND SPECIFICATIONS, THE GREATER REQUIREMENTS SHALL GOVERN.

M. ANY ENGINEERING DESIGN, PROVIDED BY OTHERS AND SUBMITTED FOR REVIEW, SHALL BEAR THE SEAL OF AN ENGINEER REGISTERED IN THE STATE OF NEVADA.

N. SUPPLIER OF ENGINEERED STRUCTURAL COMPONENTS (i.e. STEEL JOISTS, STAIRS, PRECAST ITEMS) SHALL BE RESPONSIBLE FOR COMPLETE DESIGN AND SHALL USE ENTIRE CONTRACT DOCUMENTS TO INCLUDE ALL LOADS AND DETAIL REQUIREMENTS FROM ALL DISCIPLINES. SUPPLIER SHALL PROVIDE ADDITIONAL MATERIAL REQUIRED TO MEET ALL THEIR REQUIREMENTS FOR INSTALLATION (i.e. WIDER BEARING PLATES, SHIMS, ERECTION BOLTS ETC.).

O. STRUCTURAL STEEL SUPPLIER SHALL FURNISH BOLTS FOR OSHA CONNECTIONS (SEE DRAWINGS FOR DETAILS).

P. WALL SHORING SHALL BE INSTALLED PRIOR TO BACKFILLING BEHIND ALL BUILDING RETAINING WALLS, UNLESS ALL RESTRAINING SLABS ARE INSTALLED. USE HANDTAPPING ONLY WHEN WITHIN 8'-0'', OR WITHIN HALF THE WALL HEIGHT OF BACKFILLED WALL.

Q. CONTINUOUS FOUNDATION DRAIN PIPES (FRENCH DRAINS) OR WEEP HOLES SHALL BE PROVIDED BEHIND ALL

R. BASEMENT WALLS AND ALL EXTERIOR RETAINING WALLS THAT RETAIN MORE THAN 3'-0'' OF SOIL WEEP HOLES WHERE USED SHALL BE 2'' IN DIAMETER AT 6'-0'' O.C. MAXIMUM.

PART 14: BUILDING TOLERANCES:

A. STANDARD TOLERANCES SHALL BE BASED ON THE REQUIREMENTS OF THE AISC CODE OF STANDARD PRACTICE AND ACI 117, STANDARD SPECIFICATIONS FOR TOLERANCES FOR CONCRETE CONSTRUCTION AND MATERIALS.

PART 15: EXISTING STRUCTURE:

A. EXISTING STRUCTURAL DIMENSIONS AND MEMBER SIZES ARE FOR REFERENCE ONLY. CONTRACTOR SHALL VERIFY ALL DIMENSIONS IN THE FIELD PRIOR TO FABRICATION. THE CONTRACTOR SHALL VERIFY THE ACTUAL CONFIGURATION OF EXISTING CONSTRUCTION AND THE CONDITION OF THE STRUCTURE BEFORE BEGINNING WORK. ANY DISCREPANCIES OR UNSOUND CONDITIONS SHALL BE REPORTED TO THE ARCHITECT FOR RESOLUTION BEFORE BEGINNING WORK. REFER TO ARCHITECTURAL PLANS FOR DIMENSIONS, EMBEDMENTS, AND OPENINGS NOT SHOWN. REFER TO MECHANICAL AND ELECTRICAL PLANS FOR DUCTS, PIPING, EMBEDMENTS, AND OPENINGS NOT SHOWN.

B. TEMPORARY SHORING AND BRACING MAY BE NECESSARY IN ORDER TO PERFORM THE NECESSARY STRUCTURAL MODIFICATIONS TO THE EXISTING STRUCTURE SHOWN ON THE STRUCTURAL AND ARCHITECTURAL PLANS AND DETAILS. THE CONTRACTOR MUST RETAIN A LICENSED STRUCTURAL ENGINEER WHO SHALL INVESTIGATE WHERE THIS TEMPORARY SHORING/BRACING IS REQUIRED, AND SHALL DESIGN THIS TEMPORARY SHORING/BRACING.

PART 16: SEQUENCING CONSTRUCTION AND LATERAL STABILITY:

A. THE STRUCTURAL COMPONENTS BY THEMSELVES ARE A NON-SELF-SUPPORTING STRUCTURE. LATERAL FORCES DUE TO WIND, EARTHQUAKE, OR SOIL ARE CARRIED BY THE ROOF AND FLOOR DIAPHRAGMS TO THE LATERAL SYSTEM. CERTAIN ELEMENTS SHOWN ON OR LOCAL STABILITY OF OTHER ELEMENTS (SUCH AS BEAMS, COLUMNS, AND WALLS). IF, DUE TO SEQUENCING OF CONSTRUCTION, THESE STABILITY ELEMENTS ARE NOT IN PLACE, THE CONTRACTOR SHALL RETAIN A LICENSED STRUCTURAL ENGINEER WHO SHALL INVESTIGATE WHERE TEMPORARY SHORING/BRACING IS REQUIRED, AND SHALL DESIGN THIS TEMPORARY SHORING/BRACING. THE CONTRACTOR SHALL PROVIDE THIS SHORING/BRACING UNTIL THE REQUIRED STRUCTURAL ELEMENTS AND THEIR CONNECTIONS HAVE BEEN INSTALLED AND REACH THEIR FINAL DESIGN STRENGTHS.

PART 17: MISCELLANEOUS:

A. REFER TO ENTIRE SET OF ENGINEERING DRAWINGS FOR DIMENSIONS NOT SHOWN, INCLUDING BUT NOT LIMITED TO: SIZE AND LOCATION OF CURBS, EQUIPMENT HOUSEKEEPING PADS, WALL AND FLOOR OPENINGS, BLOCKOUTS, FLOOR DEPRESSIONS, SUMPS, DRAINS, ANCHOR BOLTS, EMBEDDED ITEMS, ETC. CONTRACTOR SHALL VERIFY DIMENSIONS AND RESOLVE DISCREPANCIES OR CONFLICTS PRIOR TO CONSTRUCTION. WHERE SECTIONS ARE INDICATED ON THE PLAN BY A NUMBER AND A DRAWING NUMBER THUS, 1/C5, THE INDICATED SECTION (1) IS SHOWN ON C5.

PART 18: SPECIAL INSPECTION AND OBSERVATION:

A. THE PROJECT OWNER, WASHOE COUNTY, WILL PROVIDE THE DIRECTION ON REQUIRED SPECIAL INSPECTION ITEMS AND STRUCTURAL OBSERVATION AS REQUIRED BY WASHOE COUNTY RFP.

B. SPECIAL INSPECTIONS & SPECIAL INSPECTIONS FOR SEISMIC RESISTANCE (FOR SEISMIC DESIGN CATEGORY C) ARE REQUIRED FOR THE FOLLOWING ITEMS ON THIS PROJECT:

B.1. STRUCTURAL STEEL PER IBC 1704.3 AND 1707.2. APPROVED FABRICATOR CERTIFICATES FROM AISC OR ICC MUST BE PROVIDED TO THE BUILDING OFFICIAL TO WAIVE INSPECTION OF SHOP FABRICATION.

B.2. REINFORCED CONCRETE AND POST-INSTALLED ANCHORS PER IBC 1704.4 & 1707.7 AND THE ICC-ES REPORT FOR THE PRODUCT(S) USED.

C. THE LPG STANDBY EMERGENCY GENERATOR IS A DESIGNATED SEISMIC SYSTEM REQUIRING SEISMIC QUALIFICATION IN ACCORDANCE WITH IBC 1708.4 & ASCE 7.

PART 19: DUTIES & RESPONSIBILITIES OF SPECIAL INSPECTOR:

A. SPECIAL INSPECTOR SHALL OBSERVE WORK ASSIGNED TO VERIFY ACCORDANCE WITH APPROVED DESIGN DRAWINGS & SPECIFICATIONS.

REV	DESCRIPTION	DATE	BY
001	50% CD	6/22/2021	ADW
002	COMMMENTS	7/9/2021	ADW
003	COMMENTS	8/12/2021	ADW

SITE NAME:

RED PEAK

SITE ADDRESS:

UNNAMED ROAD
SUN VALLEY, NV 89433

WASHOE COUNTY TECHNOLOGY SERVICES

230 EDISON WAY
RENO, NV 90502

L3HARRIS COMMUNICATIONS SYSTEMS

1421 EAST SUNSET RD, SUITE 18
LAS VEGAS, NV 89120

COMMUNICATIONS SERVICES, INC.

14350 N. 87th ST., STE. 145
SCOTTSDALE, AZ 85260
PHONE: 480.291.6824

L3HARRIS COMMUNICATIONS SYSTEMS
PUBLIC SAFETY & PROFESSIONAL COMMUNICATIONS

CONTRACT 16CS02712

PRELIMINARY ENGINEERING CONSTRUCTION DRAWINGS COMPANY CONFIDENTIAL

SHEET TITLE: R777-S075
DATE: 2021-07-09
PREPARED BY: ADW COMM
VERSION 003

NEVADA SHARED RADIO SYSTEM
RED PEAK
GENERAL NOTES
PAGE GN-3

COPYRIGHT © 2021 L3HARRIS TECHNOLOGIES. ALL RIGHTS RESERVED

Exhibit B

ABBREVIATION	DESCRIPTION
#	POUNDS OR LBS.
A	AMPERES (ELEC)
A.B.	ANCHOR BOLT
ABC	AGGREGATE BASE COURSE
A/C	AIR CONDITIONER
ACI	AMERICAN CONCRETE INSTITUTE
ACP	ACOUSTICAL CEILING PANEL
AF	AMPERES FRAME (BREAKER RATING)
A.F.F.	ABOVE FINISHED FLOOR
A.F.G.	ABOVE FINISHED GRADE
AF&PA	AMERICAN FOREST AND PAPER ASS
A.G.L.	ABOVE GROUND LEVEL
AH	AMPERE HOURS (ELEC)
AIA	AMERICAN INSTITUTE OF ARCHITECTS
AIC	AMPS INTERRUPTING CAPACITY
AL	AUDIENCE LEFT
AISC	AMERICAN INSTITUTE OF STEEL CONSTRUCTION
AISI	AMERICAN IRON & STEEL INSTITUTE
AITC	AMERICAN INSTITUTE OF TIMBER CONSTRUCTION
ALT.	ALTERNATE
ALUM.	ALUMINUM
AIA	AMERICAN INSTITUTE OF ARCHITECTS
AISC	AMERICAN INST. OF STEEL CONSTRUCTION
AISI	AMERICAN IRON & STEEL INSTITUTE
AITC	AMERICAN INST. OF TIMBER CONSTRUCTION
AMSL	ABOVE MEAN SEA LEVEL
ANSI	AMERICAN NATIONAL STANDARDS INSTITUTE
ANC	ANCHOR
APA	APA-ENGINEERED WOOD ASSOCIATION
AITC	AMERICAN INST. OF TIMBER CONSTRUCTION
A.P.L.	ABOVE PARAPET LEVEL
AR	AUDIENCE RIGHT
A.R.L.	ABOVE ROOF LEVEL
ASCE	AMERICAN SOCIETY OF CIVIL ENGINEERS
ASHRAE	AMERICAN SOCIETY OF HEATING, REFRIGERATION & AIR CONDITIONING ENGINEERS
ASME	AMERICAN SOCIETY OF MECHANICAL ENGINEERS
ASTM	AMERICAN SOCIETY FOR TESTING & MATS.
AT	AMPERES TRIP (BREAKER SETTING)
ATS	AUTOMATIC TRANSFER SWITCH
AUX	AUXILIARY
AWG	AMERICAN WIRE GAUGE
AWS	AMERICAN WELDING SOCIETY
AZ or AZ.	AZIMUTH
@	AT
BKR	BREAKER
BPS	BOLTED PRESSURE SWITCH
BTS	BASE TRANSCEIVER STATION
BW	BUTT WELD
C	CONDUIT
CB	CIRCUIT BREAKER
C.J.	CONTROL JOINT
CKT	CIRCUIT
CMU	CONCRETE MASONRY UNIT
CT	CURRENT TRANSFORMER
DEMO	DEMOLITION
DIM	DIMENSION
DISC	DISCONNECT
DL	DEAD LOAD
DP	DISTRIBUTION PANEL
DS	DOWNSTAGE
DWG	DRAWING
EA	EACH
EC	ELECTRICAL CONTRACTOR
E.F.	EACH FRAME
E.G.	EQUIPMENT GROUND
EGB	EXTERIOR GROUND BUS
E.J.	EXPANSION JOINT
ELEC	ELECTRICAL
EM / EMERG	EMERGENCY
EME	ELECTROMAGNETIC ENERGY
EMT	ELECTRICAL METALLIC TUBING
EO	ELECTRICALLY OPERATED
E.S.	EACH SIDE
E.W.	EACH WAY
EWC	ELECTRIC WATER COOLER
EXIST. / (E)	EXISTING
EXT.	EXTERIOR
XP	EXPLOSION PROOF
FA	FIRE ALARM
FAB.	FABRICATE
FEMA	FEDERAL EMERGENCY MANAGEMENT AGENCY
FDN	FOUNDATION
FLA	FULL LOAD AMPS
FLR	FLOOR
FLUOR	FLUORESCENT
FOH	FRONT OF HOUSE
F.O.M.	FACE OF MASONRY
FU	FUSE
FW	FILLET WELD
FY	YIELD STRESS OF STEEL
G	GROUNDING (ELEC)
GA	GAGE OR GAUGE
GALV	GALVANIZED
GB	GRADE BREAK
GEN	GENERATOR
GRD	GRADE OR EXISTING GRADE
GFCI	GROUND FAULT CIRCUIT INTERRUPTER
G.S.N.	GENERAL STRUCTURAL NOTES
HOA	HAND-OFF-AUTO (ELEC)
HVAC	HEATING, VENTILATION AND AIR CONDITIONING EQUIP.
HP	HORSEPOWER
HV	HIGH VOLTAGE
HZ	HERTZ
IBC	INTERNATIONAL BUILDING CODE
ICBO	INTERNATIONAL CONFERENCE OF BUILDING CODES
ICC	INTERNATIONAL CODE COUNCIL
IEEE	INSTITUTE OF ELECTRICAL AND ELECTRONICS ENGINEERS
IG	ISOLATED GROUND
IGZ	ISOLATED GROUND ZONE
IPGB	INTERNAL PERIMETER GROUND BUS CONDUCTOR - 'HALO'
IPS	INTERNATIONAL PIPE STANDARD
JB	JUNCTION BOX
KIP	1000 POUNDS (#)
KV	KILOVOLT
KVA	KILOVOLT - AMPERES
KW	KILOWATT
KWH	KILOWATT - HOURS
LA	LIGHTNING ARRESTOR
LL	LIVE LOAD
LP	LIGHTING PANEL
LDP	LIGHTING DISTRIBUTION PANEL
LPG	LIQUEFIED PROPANE GAS
LTV	LET-THROUGH VOLTAGE
LVLD	LOW-VOLTAGE LOAD DISCONNECT
LWC	LIGHT WEIGHT CONCRETE
MAS	MASONRY
MAX	MAXIMUM
M.B.	MACHINE BOLT
MCB	MAIN CIRCUIT BREAKER
MCC	MOTOR CONTROL CENTER
MDP	MAIN DISTRIBUTION PANEL
MECH	MECHANICAL
MGB	MASTER GROUND BUS
MIN	MINIMUM
MISC.	MISCELLANEOUS
MLO	MAIN LUGS ONLY
MO	MASONRY OPENING
MOE	MODULES OF ELASTICITY
MPE	MECHANICAL, PLUMBING, AND ELECTRICAL
MTD	MOUNTED
MTG	MOUNTING
NIU	NETWORK INTERFACE UNIT
N	NEUTRAL
NC	NORMALLY CLOSED
NEC	NATIONAL ELECTRICAL CODE
NF	NON-FUSIBLE
NFPA	NATIONAL FIRE PROTECTION AGENCY
NIC	NOT IN CONTRACT
NIST	NATIONAL INSTITUTE OF STANDARDS AND TECHNOLOGY
NL	NIGHT LIGHT
NO	NORMALLY OPEN
NSF	NET SQUARE FEET
NTS	NOT TO SCALE
OC or O.C.	ON CENTER
OFCI	OWNER FURNISHED, CONTRACTOR INSTALLED
P	POLE
PB	PUSHBUTTON STATION (ELEC)
PC or P.C.	PRECAST
PCA	PORTLAND CEMENT ASSOCIATION
PCF	POUNDS PER CUBIC FOOT
PCI	PRECAST/PRESTRESSED CONCRETE INSTITUTE
PDP	POWER DISTRIBUTION PANEL
PH	PHASE
PL	PLATE
P.L.	PROPERTY LINE
PLF	POUNDS PER LINEAR FOOT
PLY	PLYWOOD
PP	PANEL POINT
PSI or P.S.I.	POUNDS PER SQUARE INCH
PT	PRESSURE TREATED
PTI	POST TENSIONING INSTITUTE
PVI	POINT OF VERTICAL INTERSECTION
PXFMR	POTENTIAL TRANSFORMER
RAD	RADIUS
RBS	RADIO BASE STATION
RCP	REINFORCED CONCRETE PIPE
RDP	RECEPTACLE DISTRIBUTION PANEL
RECEPT.	RECEPTACLE
RDP	RECEPTACLE DISTRIBUTION PANEL
RF	RADIO FREQUENCY
RP	RECEPTACLE PANEL
(R)	RELOCATED
RSC	RIGID STEEL CONDUIT
RX or Rx	RECEIVE
SCHED	SCHEDULE
SD	SERVICE DISCONNECT SWITCH
SDC	SEISMIC DESIGN CATEGORY
SDI	STEEL DECK INSTITUTE
SEI	STRUCTURAL ENGINEERING INSTITUTE (ASCE)
SES	SERVICE ENTRANCE SECTION
SJI	STEEL JOIST INSTITUTE
SN	SOLID NEUTRAL
SOG	SLAB ON GRADE
SPD	SURGE PROTECTION DEVICE (SEE TVSS)
SSGB	SHELTER GROUND BUS / SUB-STATION GROUND BUS
SW	SWITCH
SWBD	SWITCHBOARD
SWGR	SWITCHGEAR
TB	TERMINAL BOX
TIA	TELECOMMUNICATIONS INDUSTRY ASSOCIATION
TIA-222-G	CODE FOR TOWER CONSTRUCTION - REVISION "G"
TGB	TOWER GROUND BUS BAR
TELECOM	TELECOMMUNICATIONS
TMS	THE MASONRY SOCIETY
TNND or T	TINNED
T.C.	TOWER CENTER
TOC	TOP OF CURBING OR TOP OF CONCRETE
TOF	TOP OF FOOTING
TOS	TOP OF STEEL
TOW	TOP OF WALL
TP	TAMPER PROOF
TTB	TELEPHONE TERMINAL BACKBOARD
TX or Tx	TRANSMIT
TYP or TYP.	TYPICAL
XFMR / TR	TRANSFORMER
TVSS	TRANSIENT VOLTAGE SURGE SUPPRESSOR
UA or U/A	UNDERGROUND ALARMS (I.E. MONITOR LINE)
UE or U/E	UNDERGROUND ELECTRICAL
UG or U/G	UNDERGROUND
UL or U.L.	UNDERWRITERS LABORATORIES, INC.
U.N.O.	UNLESS NOTED OTHWERWISE
UT or U/T	UNDERGROUND TELCO
V	VOLTS
VSWR	VOLTAGE STANDING WAVE RATIO
W	WIRE
WP	WEATHERPROOF - NEMA 3R

LEGEND

1	REVISION
1	KEYED NOTES
100	ROOM NUMBER
	CENTER LINE
	PROPERTY LINE
	DRAINAGE DITCH / WATER FLOW DIRECTION
	EASEMENT LINE
—FB—FB—FB—	FIBER
—GAS—GAS—	GAS LINE
—OHE—OHE—	OVERHEARD POWER LINE
—E—E—E—	UNDERGROUND ELECTRICAL ROUTE
—M—M—M—	UNDERGROUND MONITOR CONDUIT
—X—X—X—	FENCE
	LOT LINE
—CX—	COAXIAL CABLE
—G—	GROUND CONDUCTOR
	GROUT OR PLASTER
	(E) BRICK
	(E) MASONRY
	CONCRETE
	EARTH
	GRAVEL
	PLYWOOD
	SAND
	STEEL
	WOOD CONT.
	WOOD BLOCKING
	GROUND ROD
	GROUND BUS BAR
	MECHANICAL CONNECTION
	EXOTHERMIC WELD OR IRREVERSIBLE HIGH-COMPRESSION CRIMP
	GROUND ACCESS WELL

REV	DESCRIPTION	DATE	BY
001	50% CD	6/22/2021	ADW
002	COMMMENTS	7/9/2021	ADW
003	COMMENTS	8/12/2021	ADW

SITE NAME:

RED PEAK

SITE ADDRESS:

UNNAMED ROAD
SUN VALLEY, NV 89433

WASHOE COUNTY TECHNOLOGY SERVICES

230 EDISON WAY
RENO, NV 90502

L3HARRIS™

L3HARRIS COMMUNICATIONS SYSTEMS

1421 EAST SUNSET RD, SUITE 18
LAS VEGAS, NV 89120

COMMUNICATIONS SERVICES, INC.

14350 N. 87th ST., STE. 145
SCOTTSDALE, AZ 85260
PHONE: 480.291.6824

L3HARRIS™ COMMUNICATIONS SYSTEMS
PUBLIC SAFETY & PROFESSIONAL COMMUNICATIONS

CONTRACT
16CS02712

PRELIMINARY ENGINEERING CONSTRUCTION DRAWINGS COMPANY CONFIDENTIAL

SHEET TITLE: R777-S075	NEVADA SHARED RADIO SYSTEM
DATE: 2021-07-09	RED PEAK
PREPARED BY: ADW COMM	ABBREVIATIONS & LEGEND
VERSION 003	PAGE G-4

COPYRIGHT © 2021 L3HARRIS TECHNOLOGIES. ALL RIGHTS RESERVED

Exhibit B

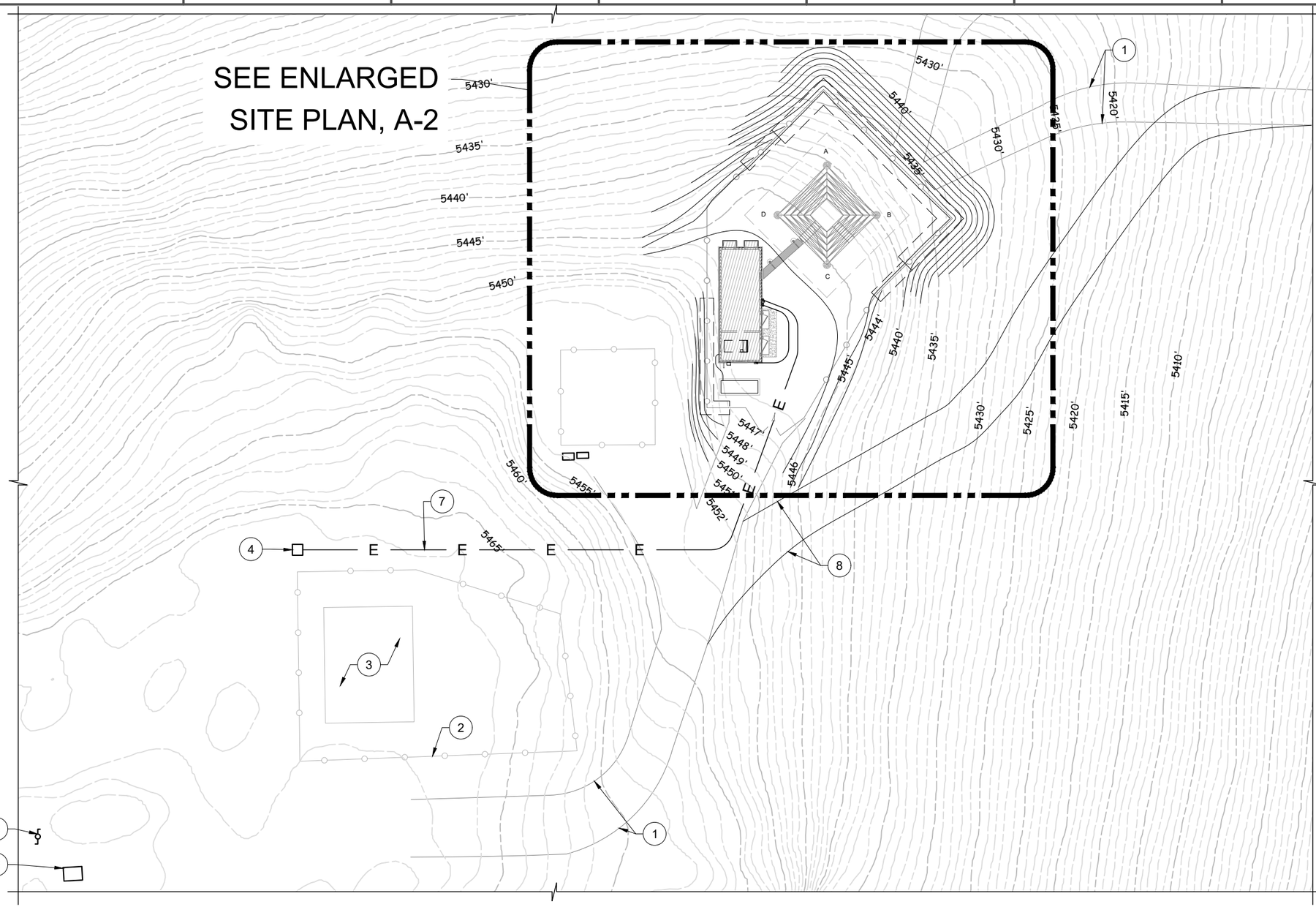

SITE PLAN KEY NOTES: (#)

1. EXISTING DIRT ROAD
2. EXISTING CHAIN LINK FENCED COMPOUND (OTHERS)
3. EXISTING BUILDING (OTHERS)
4. EXISTING TRANSFORMER LT 13040 ON CONCRETE PAD. NEW POWER SOURCE
5. EXISTING POWER POLE
6. EXISTING SWITCH CABINET
7. NEW U.G. CONDUIT FOR POWER RUN FROM EXISTING POWER SOURCE TO NEW METER APPROX. 200', SEE DETAIL 1 ON SHEET A-6
8. NEW RE-ROUTE DIRT ROAD

OVERALL SITE PLAN

SCALE: 1" = 30'-0"

30' 15' 0" 30'

N

REV	DESCRIPTION	DATE	BY
001	50% CD	6/22/2021	ADW
002	COMMMENTS	7/9/2021	ADW
003	COMMENTS	8/12/2021	ADW

SITE NAME:

RED PEAK

SITE ADDRESS:

UNNAMED ROAD
SUN VALLEY, NV 89433

WASHOE COUNTY TECHNOLOGY SERVICES

230 EDISON WAY
RENO, NV 90502

L3HARRIS COMMUNICATIONS SYSTEMS

1421 EAST SUNSET RD, SUITE 18
LAS VEGAS, NV 89120

ADW COMMUNICATIONS SERVICES, INC.

14350 N. 87th ST., STE. 145
SCOTTSDALE, AZ 85260
PHONE: 480.291.6824

L3HARRIS™ COMMUNICATIONS SYSTEMS
PUBLIC SAFETY & PROFESSIONAL COMMUNICATIONS

CONTRACT
16CS02712

PRELIMINARY ENGINEERING CONSTRUCTION DRAWINGS COMPANY CONFIDENTIAL

SHEET TITLE: R777-S075-X-X
DATE: 2021-07-09
PREPARED BY: ADW COMM
VERSION 003

NEVADA SHARED RADIO SYSTEM
RED PEAK
OVERALL SITE PLAN
PAGE A-1

COPYRIGHT © 2021 L3HARRIS TECHNOLOGIES. ALL RIGHTS RESERVED

Exhibit B

ENLARGED SITE PLAN

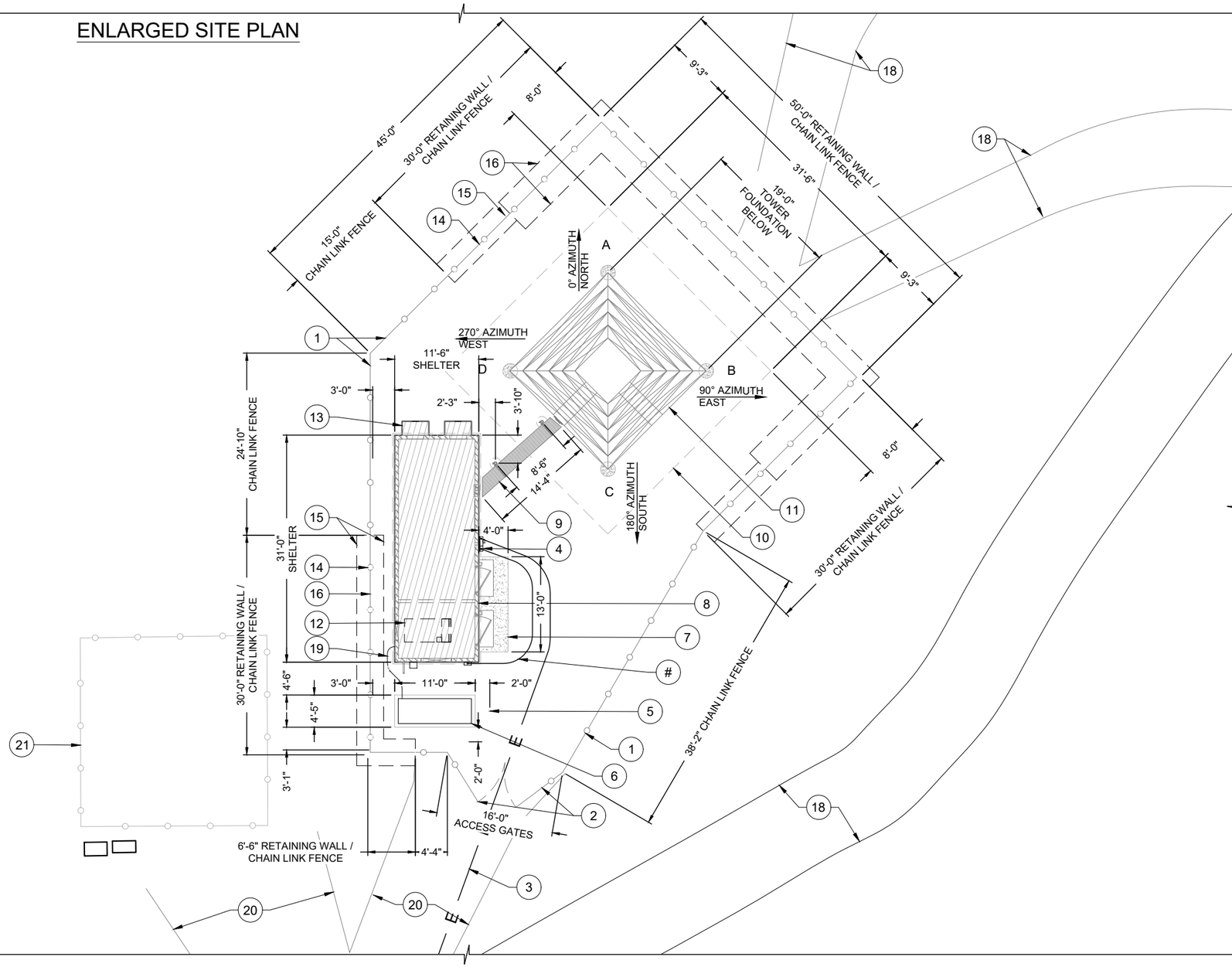

SITE PLAN KEY NOTES: (#)

1. NEW 8' TALL CHAIN LINK FENCE WITH 1' OF BARBED WIRES ON TOP (9' OVERALL HEIGHT), SEE DETAIL 1 ON SHEET A-4
2. NEW (2) 8' WIDE SWING FENCE GATES, SEE DETAIL 1 ON SHEET A-4
3. NEW U.G. CONDUIT FOR POWER RUN FROM EXISTING POWER SOURCE TO NEW METER, APPROX. 200', SEE DETAIL 1 ON SHEET A-6
4. NEW METER AND DISCONNECT SWITCH MOUNTED TO SHELTER'S WALL, SEE DETAIL 3 ON SHEET A-6
5. NEW BOLLARD (TYP. OF 2), SEE DETAIL 2 ON SHEET A-6
6. NEW DIESEL TANK ON NEW CONCRETE PAD, SEE DETAIL 6 ON SHEET A-6
7. NEW 13'x4' CONCRETE STOOP, SEE DETAIL 3 ON SHEET A-5
8. NEW 11'-6"x31'-0" EQUIPMENT SHELTER WITH GENERATOR ROOM SUPPORT BY CONCRETE SLAB, SEE DETAIL 1 ON SHEET A-5 & MANUFACTURER'S DRAWINGS
9. NEW 12'-9" LONG ICE BRIDGE, SEE DETAIL 2 ON SHEET A-4
10. NEW 31'-6"x31'-6" TOWER FOOTING BELOW, SEE TOWER MANUFACTURER'S DRAWINGS
11. NEW 180'-0" TALL 4-LEGGED SELF-SUPPORT TOWER, SEE MANUFACTURER'S DRAWINGS
12. NEW 50kW, 1PH, 500 GAL DIESEL GENERATOR, SEE MANUFACTURER'S DRAWINGS
13. NEW AC UNIT (TYP. OF 2)
14. NEW CHAIN LINK FENCE ON TOP OF RETAINING CMU WALL, SEE DETAIL 4 ON SHEET A-7
15. NEW RETAINING CMU WALL, SEE DETAILS 1, 2 & 3 ON SHEET A-8
16. NEW WALL FOOTING BELOW, SEE DETAIL 4 ON SHEET A-8
17. NEW U.G. CONDUIT FOR POWER RUN FROM DISCONNECT TO SAFETY SWITCH ON SHELTER EXTERIOR WALL, SEE DETAIL 1 ON SHEET A-6
18. NEW RE-ROUTE DIRT ROAD
19. NEW U.G. CONDUIT FOR DIESEL FUEL RUN FROM DIESEL TANK TO GENERATOR APPROX. 10', SEE DETAIL 5 ON SHEET A-6
20. EXISTING DIRT ROAD (TYP.)
21. EXISTING CHAIN LINK FENCED COMPOUND (OTHERS)

NOTE:

1. EXISTING GRADING CONTOUR LINES WERE NOT SHOWN FOR CLARITY.

SCALE: 1/16" = 1'-0"

16' 12' 8' 4' 0" 16'

REV	DESCRIPTION	DATE	BY
001	50% CD	6/22/2021	ADW
002	COMMMENTS	7/9/2021	ADW
003	COMMENTS	8/12/2021	ADW

SITE NAME:

RED PEAK

SITE ADDRESS:

UNNAMED ROAD
SUN VALLEY, NV 89433

WASHOE COUNTY TECHNOLOGY SERVICES

230 EDISON WAY
RENO, NV 90502

L3HARRIS COMMUNICATIONS SYSTEMS

1421 EAST SUNSET RD, SUITE 18
LAS VEGAS, NV 89120

ADW COMMUNICATIONS SERVICES, INC.

14350 N. 87th ST., STE. 145
SCOTTSDALE, AZ 85260
PHONE: 480.291.6824

L3HARRIS COMMUNICATIONS SYSTEMS
PUBLIC SAFETY & PROFESSIONAL COMMUNICATIONS

CONTRACT 16CS02712

PRELIMINARY ENGINEERING CONSTRUCTION DRAWINGS COMPANY CONFIDENTIAL

SHEET TITLE: R777-S075-X-X
DATE: 2021-07-09
PREPARED BY: ADW COMM
VERSION 003

NEVADA SHARED RADIO SYSTEM
RED PEAK
ENLARGED SITE PLAN
PAGE A-2.1

COPYRIGHT © 2021 L3HARRIS TECHNOLOGIES. ALL RIGHTS RESERVED

Exhibit B

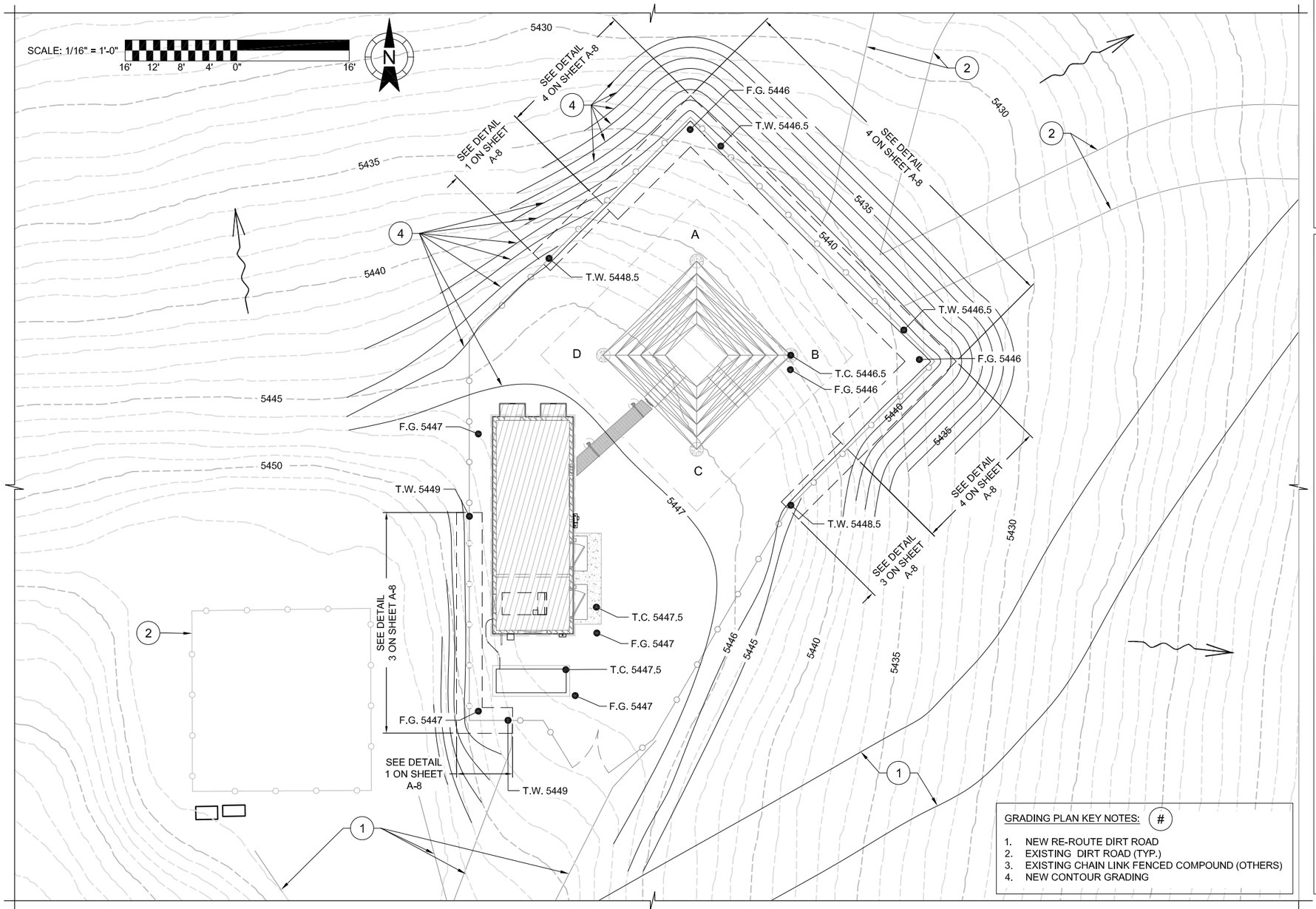

GRADING SITE PLAN

LEGEND:

- EXISTING CONTOUR LINE
- GRADE TO DRAIN
- NEW CONTOUR LINE
- F.G. 5446 — FINISHED GRADE
- T.C. 5446.5 — TOP OF CONCRETE
- T.W. 5446.5 — TOP WALL

NOTES:

1. SEE EROSION CONTROL AND GRADING NOTES ON THIS SHEET FOR GENERAL REQUIREMENTS.
2. SLOPE TO DRAIN; 10' FROM BUILDING FOUNDATION FOR POSITIVE DRAINAGE.

EROSION CONTROL NOTES:

1. THIS SHEET IS FOR GENERAL GUIDANCE ONLY. IT IS INTENDED THAT SEDIMENT AND SEDIMENT-LADEN WATER DOES NOT LEAVE THE SITE. THE CONTRACTOR SHALL USE ALL AVAILABLE MEANS TO ACHIEVE THIS RESULT.
2. REFER GENERAL NOTES FOR ANTI-EROSION CONTROL.

GRADING NOTES:

1. ANY GRADING ON THE SITE SHALL BE COMPLETED SO AS TO MAINTAIN (E) DRAINAGE FROM ADJACENT PROPERTIES.
2. SEDIMENTATION BARRIERS SHALL BE PLACED PRIOR TO ANY GRADING OR SURFACE DISTURBANCE.
3. THE CONTRACTOR SHALL PROTECT ALL (E) STRUCTURES, TREES AND IMPROVEMENTS DURING CONSTRUCTION, UNLESS OTHERWISE NOTED.
4. ALL FILLS WILL CONSIST OF EXCAVATED OR STOCKPILED MATERIAL FROM THE SITE AND/OR BE SUITABLE CLEAN STRUCTURAL FILL. REFER GENERAL NOTES FOR MORE INFORMATION
5. THE FINISH ELEVATION OF ALL CONCRETE STRUCTURES MUST BE VERIFIED WITH CONSTRUCTION MANAGER. THE FIELD ADJUSTMENT FOR GRADE ELEVATION MAY REQUIRED AT THAT TIME.
6. CUT/FILL QUANTITATIVE HAVE NOT BEEN CALCULATED CONTRACTOR IS RESPONSIBLE FOR PERMITTING ALL QUANTITIES.

STRUCTURAL FILLS:

1. ALL AREAS WHERE STRUCTURAL EMBANKMENT IS TO BE PLACED OR WHERE OTHERWISE SHOWN ON THE PLANS SHALL BE CLEARED AND GRUBBED OF BRUSH, ROOTS, SOD AND OTHER VEGETATIVE GROWTH OR DEBRIS, TO A DEPTH OF AT LEAST FOUR INCHES (4").
2. IN ADDITION, PRIOR TO PLACING FILLS EXCAVATE TOPSOIL (STRIPPINGS) TO A DEPTH OF AT LEAST SIX INCHES (6"). EXCAVATED TOPSOIL (STRIPPINGS) SHALL BE STOCKPILED, SHAPED AND KEPT SEPARATE FROM THE OTHER EXCAVATED MATERIALS WHERE INDICATED.
3. WHERE SPECIAL STRIPPING IS SPECIFIED THE CLEARING AND GRUBBING PROCEDURE WILL BE COMBINED WITH THE TOPSOIL STRIPPING TO A TOTAL DEPTH OF TEN INCHES (10"). SPECIAL STRIPPINGS SHALL BE STOCKPILED, SHAPED AND KEPT SEPARATE FROM THE THE OTHER EXCAVATED MATERIALS WHERE INDICATED.
4. AFTER STRUCTURAL EMBANKMENT AREAS HAVE BEEN CLEARED, GRUBBED AND STRIPPED THE SURFACES TO RECEIVE FILL SHALL BE SCARIFIED TO A DEPTH OF TWELVE INCHES (12"). AFTER SCARIFICATION NO SOIL SHALL EXCEED A MAXIMUM DIMENSION OF THREE INCHES (3").
5. FOR BACKFILL AND COMPACTION, FOLLOW GEOTECHNICAL REPORT FOR MATERIAL SPECIFICATIONS AND RECOMMENDATIONS

GRADING PLAN KEY NOTES: #

1. NEW RE-ROUTE DIRT ROAD
2. EXISTING DIRT ROAD (TYP.)
3. EXISTING CHAIN LINK FENCED COMPOUND (OTHERS)
4. NEW CONTOUR GRADING

REV	DESCRIPTION	DATE	BY
001	50% CD	6/22/2021	ADW
002	COMMMENTS	7/9/2021	ADW
003	COMMENTS	8/12/2021	ADW

SITE NAME:

RED PEAK

SITE ADDRESS:

UNNAMED ROAD
SUN VALLEY, NV 89433

WASHOE COUNTY TECHNOLOGY SERVICES

230 EDISON WAY
RENO, NV 90502

L3HARRIS

L3HARRIS COMMUNICATIONS SYSTEMS

1421 EAST SUNSET RD, SUITE 18
LAS VEGAS, NV 89120

COMMUNICATIONS SERVICES, INC.

14350 N. 87th ST., STE. 145
SCOTTSDALE, AZ 85260
PHONE: 480.291.6824

L3HARRIS — COMMUNICATIONS SYSTEMS — PUBLIC SAFETY & PROFESSIONAL COMMUNICATIONS

CONTRACT 16CS02712

PRELIMINARY ENGINEERING CONSTRUCTION DRAWINGS COMPANY CONFIDENTIAL

SHEET TITLE: R777-S075-X-X
DATE: 2021-07-09
PREPARED BY: ADW COMM
VERSION 003

NEVADA SHARED RADIO SYSTEM
RED PEAK
GRADING PLAN
PAGE A-2.2

COPYRIGHT © 2021 L3HARRIS TECHNOLOGIES. ALL RIGHTS RESERVED

Exhibit B

FLOOR PLAN - FINAL - RED PEAK
NEW SHELTER - P25 RF LOCATION

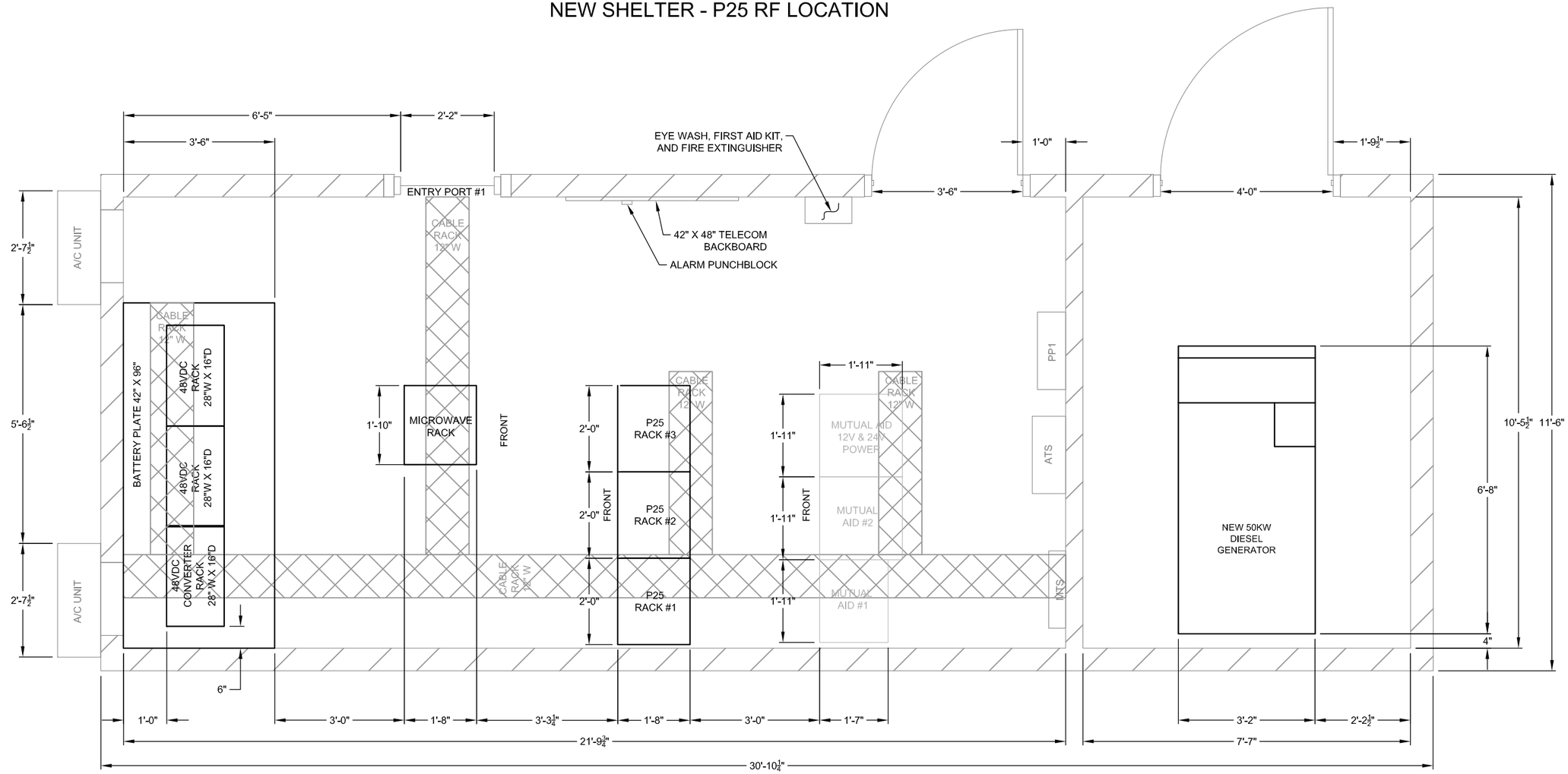

NOTES

1. MUTUAL AID RACKS MOVED BY WASHOE COUNTY FROM EXISTING SHELTER.

SCALE: 3/8" = 1'-0"

REV	DESCRIPTION	DATE	BY
001	50% CD	6/22/2021	ADW
002	COMMMENTS	7/9/2021	ADW
003	COMMENTS	8/12/2021	ADW

SITE NAME:

RED PEAK

SITE ADDRESS:

UNNAMED ROAD
SUN VALLEY, NV 89433

WASHOE COUNTY TECHNOLOGY SERVICES

230 EDISON WAY
RENO, NV 90502

L3HARRIS COMMUNICATIONS SYSTEMS

1421 EAST SUNSET RD, SUITE 18
LAS VEGAS, NV 89120

COMMUNICATIONS SERVICES, INC.

14350 N. 87th ST., STE. 145
SCOTTSDALE, AZ 85260
PHONE: 480.291.6824

L3HARRIS™ COMMUNICATIONS SYSTEMS
PUBLIC SAFETY & PROFESSIONAL COMMUNICATIONS

CONTRACT 16CS02712

PRELIMINARY ENGINEERING CONSTRUCTION DRAWINGS COMPANY CONFIDENTIAL

SHEET TITLE: R777-S075-X-X
DATE: 2021-07-09
PREPARED BY: ADW COMM
VERSION 003

NEVADA SHARED RADIO SYSTEM
RED PEAK
FLOOR PLAN - FINAL
PAGE A-2.3

COPYRIGHT © 2021 L3HARRIS TECHNOLOGIES. ALL RIGHTS RESERVED

Exhibit B

ENTRY PORT DIAGRAM

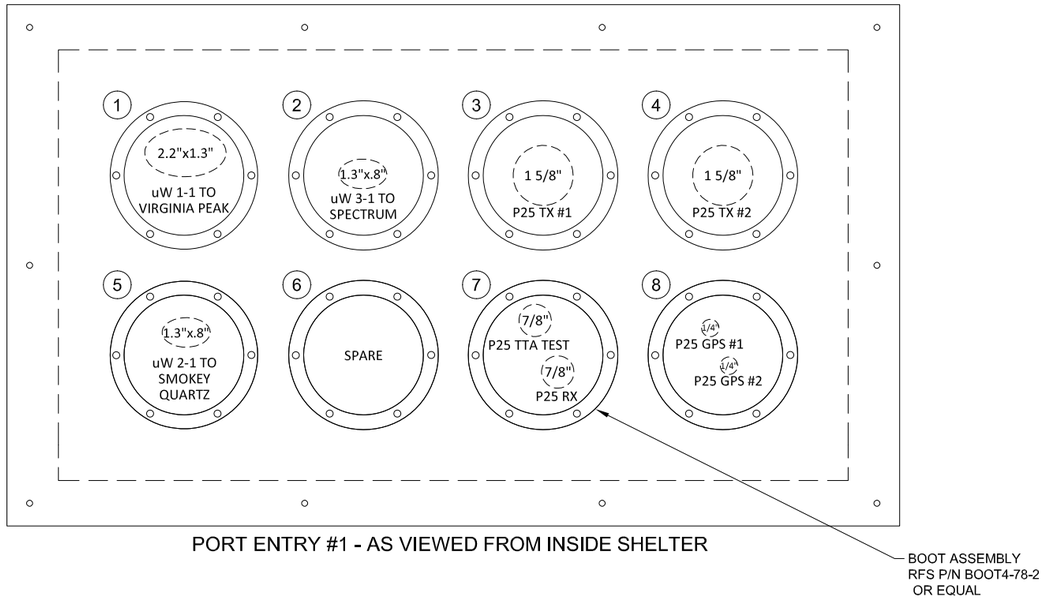

PORT ENTRY #1 - AS VIEWED FROM INSIDE SHELTER

NSRS RF LINE MARKING GUIDELINE

LINE FUNCTION	COLOR AND NUMBER			
P25 TX #1:	RED			
P25 TX #2:	RED	RED		
NCRN VHF TX:	RED	RED	RED	
NCRN 800 TX:	RED	RED	RED	RED
P25 RX:	GREEN			
NCRN VHF RX:	GREEN	GREEN		
NCRN 800 RX:	GREEN	GREEN	GREEN	
P25 TTA TEST:	BLUE			
NCRN TTA TEST:	BLUE	BLUE		
P25 GPS #1:	YELLOW			
P25 GPS #2:	YELLOW	YELLOW		
NSC GPS #1:	YELLOW	YELLOW	YELLOW	
NSC GPS #2:	YELLOW	YELLOW	YELLOW	YELLOW

NOTES:

1. DRAWING TO BE UPDATED AFTER WASHOE COUNTY INSTALLS MUTUAL AID RACKS

REV	DESCRIPTION	DATE	BY
001	50% CD	6/22/2021	ADW
002	COMMMENTS	7/9/2021	ADW
003	COMMENTS	8/12/2021	ADW

SITE NAME:

RED PEAK

SITE ADDRESS:

UNNAMED ROAD
SUN VALLEY, NV 89433

WASHOE COUNTY TECHNOLOGY SERVICES

230 EDISON WAY
RENO, NV 90502

L3HARRIS COMMUNICATIONS SYSTEMS

1421 EAST SUNSET RD, SUITE 18
LAS VEGAS, NV 89120

COMMUNICATIONS SERVICES, INC.

14350 N. 87th ST., STE. 145
SCOTTSDALE, AZ 85260
PHONE: 480.291.6824

L3HARRIS™ COMMUNICATIONS SYSTEMS
PUBLIC SAFETY & PROFESSIONAL COMMUNICATIONS

CONTRACT 16CS02712

PRELIMINARY ENGINEERING CONSTRUCTION DRAWINGS COMPANY CONFIDENTIAL

SHEET TITLE: R777-S075-X-X
DATE: 2021-07-09
PREPARED BY: ADW COMM
VERSION 003

NEVADA SHARED RADIO SYSTEM
RED PEAK
ENTRY PORT DIAGRAM
PAGE A-2.4

COPYRIGHT © 2021 L3HARRIS TECHNOLOGIES. ALL RIGHTS RESERVED

Exhibit B

TOWER ELEVATION

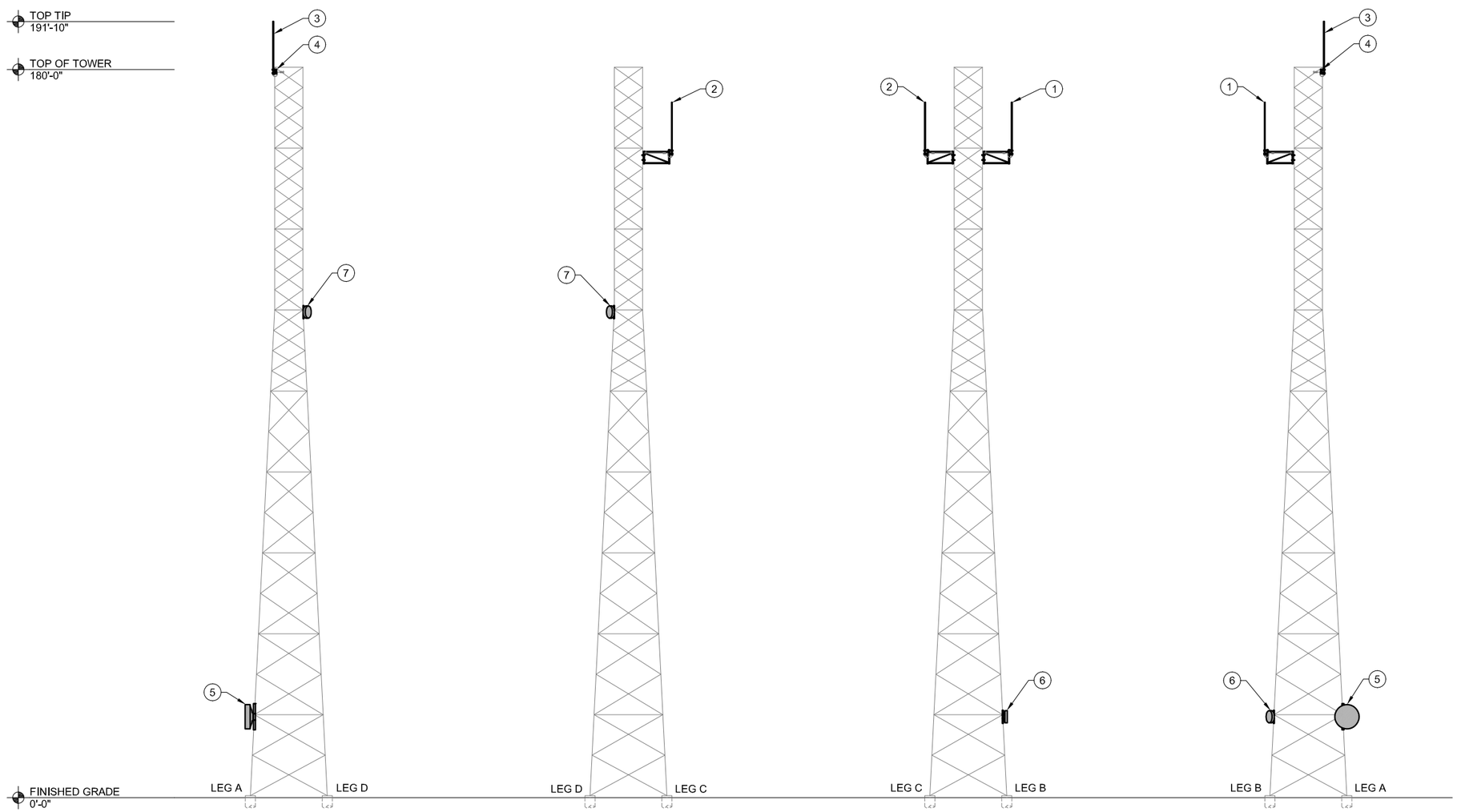

NORTH ELEVATION

WEST ELEVATION

SOUTH ELEVATION

EAST ELEVATION

NOTES:

1. REFER TO TOWER PLAN, SHEET A-3.2 FOR TOWER APPURTENANCE CHART.
2. GPS ANTENNAS ARE INTENTIONALLY NOT SHOWN.

REV	DESCRIPTION	DATE	BY
001	50% CD	6/22/2021	ADW
002	COMMMENTS	7/9/2021	ADW
003	COMMENTS	8/12/2021	ADW

SITE NAME:

RED PEAK

SITE ADDRESS:

UNNAMED ROAD
SUN VALLEY, NV 89433

WASHOE COUNTY TECHNOLOGY SERVICES

230 EDISON WAY
RENO, NV 90502

L3HARRIS COMMUNICATIONS SYSTEMS

1421 EAST SUNSET RD, SUITE 18
LAS VEGAS, NV 89120

COMMUNICATIONS SERVICES, INC.

14350 N. 87th ST., STE. 145
SCOTTSDALE, AZ 85260
PHONE: 480.291.6824

L3HARRIS™ COMMUNICATIONS SYSTEMS
PUBLIC SAFETY & PROFESSIONAL COMMUNICATIONS

CONTRACT
16CS02712

PRELIMINARY ENGINEERING CONSTRUCTION DRAWINGS COMPANY CONFIDENTIAL

SHEET TITLE: R777-S075-X-X
DATE: 2021-07-09
PREPARED BY: ADW COMM
VERSION 003

NEVADA SHARED RADIO SYSTEM
RED PEAK
TOWER ELEVATION
PAGE A-3.1

COPYRIGHT © 2021 L3HARRIS TECHNOLOGIES. ALL RIGHTS RESERVED

Exhibit B

TOWER APPURTENANCE CHART

SITE	ENTITY	REGION	LATITUDE	LONGITUDE	ANT #	ANTENNA # NAME	TOWER LEG	ANTENNA EQUIPMENT	STATUS	ANTENNA MODEL	ANTENNA TYPE	ANT. CENTER LINE (FT)	ANTENNA AZIMUTH	MOUNT TYPE	MOUNT AZIMUTH	FEEDLINE 1	FEEDLINE 2
RED PEAK (NEW SITE)	WC	2	39° 35' 04.13"	-119° 47' 53.73"	1	Collinear Omni	B	P25 TX Antenna	New	SC499-HWBLDF(D00-PIP)	11.7' Omni	166	-	6' Standoff		1-5/8"	
180' 4-Legged SST Azimuth through Leg A is 15°					2	Collinear Omni	C	P25 TX Antenna #2	New	SC499-HWBLDF(D00-PIP)	11.7' Omni	166	-	6' Standoff		1-5/8"	
					3	Collinear Omni	A	P25 RX Antenna	New	SC499-HWBLDF(D00-PIP)	11.7' Omni	186	-	Standard w/ No Standoff		1/2" to TTA	
					4	RX Amplifier	A	Tower Top Amp	New	CP00732	RX Amplifier	180		Standard		7/8"	7/8''
					5	uW 1-1	B	uW Ant to Virginia Peak	New	PAD6-59B	6' Microwave	20	56	Pipe to Pipe	56	E-60	
					6	uW 2-1	B	uW Ant to Smokey Quartz	New	SC3-W100B	3' Microwave	20	89	Pipe to Pipe	89	E-105	
					7	uW 3-1	D	uW Ant to Spectrum	New	SC3-W100B	3' Microwave	120	250	Pipe to Pipe	250	E-105	
						GPS 1	Ice Bridge	P25 GPS	New	1200-213	GPS Cone	12				1/4"	
						GPS 2	Ice Bridge	P25 GPS	New	1200-213	GPS Cone	12				1/4"	

NOTES:

1. REFER TO TOWER PLAN, SHEET A-3.1 FOR TOWER ELEVATIONS.

REV	DESCRIPTION	DATE	BY
001	50% CD	6/22/2021	ADW
002	COMMMENTS	7/9/2021	ADW
003	COMMENTS	8/12/2021	ADW

SITE NAME:

RED PEAK

SITE ADDRESS:

UNNAMED ROAD
SUN VALLEY, NV 89433

WASHOE COUNTY TECHNOLOGY SERVICES

230 EDISON WAY
RENO, NV 90502

L3HARRIS COMMUNICATIONS SYSTEMS

1421 EAST SUNSET RD, SUITE 18
LAS VEGAS, NV 89120

COMMUNICATIONS SERVICES, INC.

14350 N. 87th ST., STE. 145
SCOTTSDALE, AZ 85260
PHONE: 480.291.6824

L3HARRIS™ COMMUNICATIONS SYSTEMS
PUBLIC SAFETY & PROFESSIONAL COMMUNICATIONS

CONTRACT 16CS02712

PRELIMINARY ENGINEERING CONSTRUCTION DRAWINGS COMPANY CONFIDENTIAL

SHEET TITLE: R777-S075-X-X
DATE: 2021-07-09
PREPARED BY: ADW COMM
VERSION 003

NEVADA SHARED RADIO SYSTEM
RED PEAK
TOWER APPURTENANCE CHART
PAGE A-3.2

COPYRIGHT © 2021 L3HARRIS TECHNOLOGIES. ALL RIGHTS RESERVED

Exhibit B

TYPICAL CHAIN LINK FENCE KEYED NOTES: (#)

1. 4" NOMINAL CORNER POST SCHEDULE 40 PIPE.
2. LINE POST: 4" SCHEDULE 80 PIPE SPACED AT MAXIMUM 10'-0" O.C.
3. TOP RAIL & BRACE RAIL: 1-1/2" PIPE, PER ASTM-F1083.
4. FABRIC: 9 GA. CORE WIRE SIZE 3/8" MESH, CONFORMING TO ASTM-A392.
5. BOTTOM RAIL & BRACE RAIL: 1-1/2" PIPE, PER ASTM-F1083.
6. TENSION WIRE: 9 GA. GALVANIZED STEEL.
7. BARBED WIRE: DOUBLE STRAND 12½" O.D. TWISTED WIRE TO MATCH WITH FABRIC 14 GA., 4 PT. BARBS SPACED ON APPROXIMATELY 5" ON CENTER.
8. STRETCHER BAR.
9. 3/8" DIAGONAL ROD WITH GALVANIZED STEEL TURNBUCKLE OR DIAGONAL THREADED ROD.
10. POST BRACE: 1-5/8" DIA. AT CORNERS AND GATES
11. 1-1/2" MAXIMUM CLEARANCE FROM GRADE.
12. FINISHED GRADE SHALL BE UNIFORM AND LEVEL
13. SUB-GRADE
14. GATE POST 4". SCHEDULE 40 PIPE, FOR GATE WIDTHS UP TO 7 FEET USE SINGLE SWING GATE PER ASTM-F1083.
15. GATE FRAME: 1-1/2" PIPE, PER ASTM-F1083.
16. TYP. GATE LATCH VERIFY IN FIELD
17. GATE DIAGONAL GALVANIZED STEEL 1-1/2" PIPE.
18. POST CONCRETE FOUNDATION (2000 PSI)
19. NATURAL SOIL
20. DROP ROD
21. CONCRETE MUSHROOM

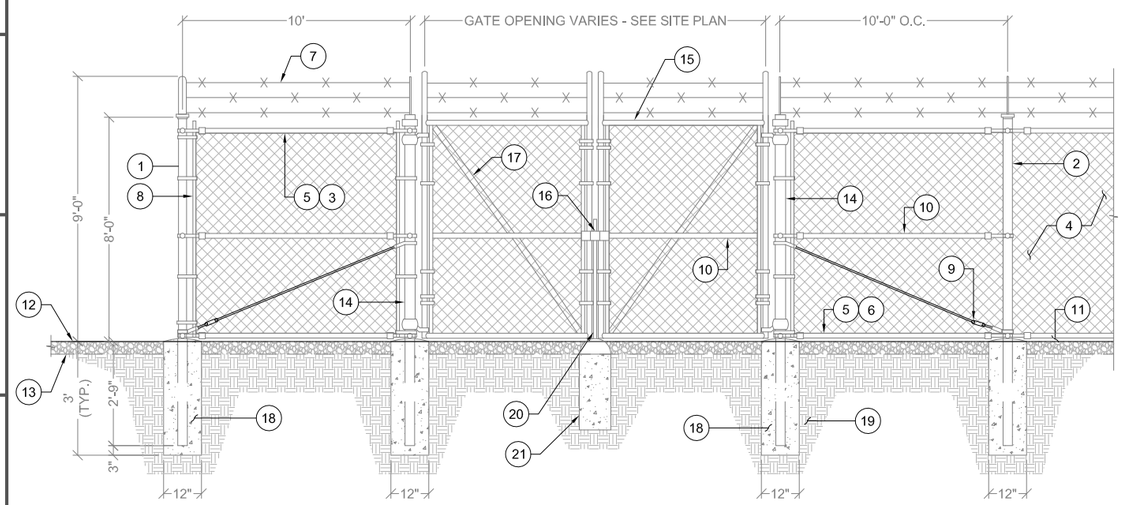

1 CHAIN LINK FENCE DETAIL
NTS

ICE BRIDGE KEY NOTES: (#)

1. DIRECT BURIAL 3-1/2" PIPE COLUMN
2. SAFETY GRATING 24"x10'x12 GAUGE
3. 24" WAVEGUIDE BRIDGE SUPPORT BRACKET
4. 1/2"x3-5/8"x6" GALV. U-BOLT KIT
5. 1/2" J-BOLT
6. 1/2" GALV. FLAT WASHER
7. 1/2" GALV. LOCK WASHER
8. 1/2" GALV. HEX NUT
9. VERTICAL TRAPEZE SECTION
10. HORIZONTAL TRAPEZE SECTION
11. SQUARE WASHER, 1-1/2"x1-1/2" W/ 7/16" HOLE
12. 3/8"x2" GALV BOLT KIT
13. 3/8" GALV FLAT WASHER
14. 3/8"x1" GALV BOLT KIT
15. PIPE CAP 3-1/2"
16. FINISHED GRADE
17. CAP FOUNDATION FOR WATERSHED
18. CONCRETE POST FOUNDATION
19. GPS ANTENNA
20. EQUIPMENT SHELTER
21. TOWER FACE
22. COAXIAL CABLE DRIP LOOP

NOTE:
ATTACH THE PIPES OR PIPE MOUNTS TO THE BRACKETS PRIOR TO ADDING J-BOLT

REFER TO ANDREW PART #WB-K210-S (24" WIDE) OR EQUIV.

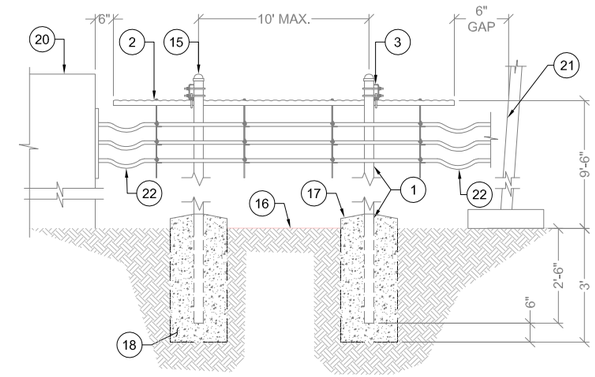

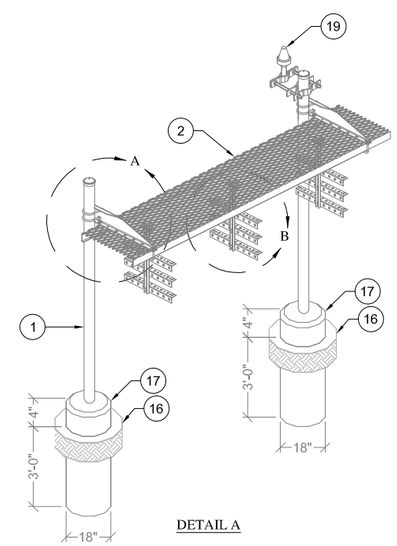

DETAIL A

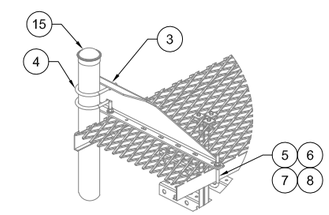

DETAIL A

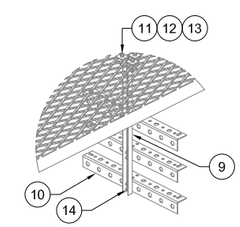

DETAIL B

2 ICE BRIDGE DETAIL
NTS

REV	DESCRIPTION	DATE	BY
001	50% CD	6/22/2021	ADW
002	COMMMENTS	7/9/2021	ADW
002	COMMENTS	8/12/2021	ADW

SITE NAME:
RED PEAK
SITE ADDRESS:
UNNAMED ROAD
SUN VALLEY, NV 89433

WASHOE COUNTY TECHNOLOGY SERVICES
230 EDISON WAY
RENO, NV 90502

L3HARRIS COMMUNICATIONS SYSTEMS
1421 EAST SUNSET RD, SUITE 18
LAS VEGAS, NV 89120

COMMUNICATIONS SERVICES, INC.
14350 N. 87th ST., STE. 145
SCOTTSDALE, AZ 85260
PHONE: 480.291.6824

L3HARRIS COMMUNICATIONS SYSTEMS
PUBLIC SAFETY & PROFESSIONAL COMMUNICATIONS

CONTRACT 16CS02712

PRELIMINARY ENGINEERING CONSTRUCTION DRAWINGS COMPANY CONFIDENTIAL

SHEET TITLE: R777-S101-X-X
DATE: 2021-07-09
PREPARED BY: ADW COMM
VERSION 002

NEVADA SHARED RADIO SYSTEM
RED PEAK
CONSTRUCTION DETAILS
PAGE A-4

COPYRIGHT © 2021 L3HARRIS TECHNOLOGIES. ALL RIGHTS RESERVED

Exhibit B

TYPICAL OLDCASTLE SHELTER CONCRETE SLAB KEYED NOTES: (#)

1. MIN. ½" CHAMFER ON ALL EXPOSED EDGES BOTH VERTICAL & HORIZONTAL
2. TYPICAL TURNDOWN AT PERIMETER
3. SHELTER ANCHOR BOLTS; SEE MANUFACTURER'S SHELTER DRAWINGS
4. 8" THICK CONCRETE PAD W/ #4 @ 12" O.C. EACH WAY
5. T.O.C.
6. SITE GRAVEL
7. NATIVE SOIL
8. (3) #5 @ TOP
9. #4 STIRRUPS @ 12" O.C. (TYP.)
10. (3) #5 BOTTOM
11. ¾" CRUSHED ROCK OR ABC BELOW, 6" OVERALL THICKNESS
12. FINISH GRADE
13. SHELTER BY OTHERS; SEE MANUFACTURER'S SHELTER DRAWINGS
14. (2) #5 AT MID HEIGHT OF TURNDOWN
15. USE 6 MIL PLASTIC MOISTURE BARRIER

NOTES:

1. CONCRETE STRENGTH SHALL BE 4000 PSI, MIN.
2. CONCRETE STOOP PLACEMENT DEPENDANT ON SHELTER DOOR LOCATION. REFER TO OLDCASTLE SHELTER DRAWINGS FOR EXACT DOOR LOCATION AND TO SITE PLAN FOR STOOP LOCATION AND DIMENSIONS

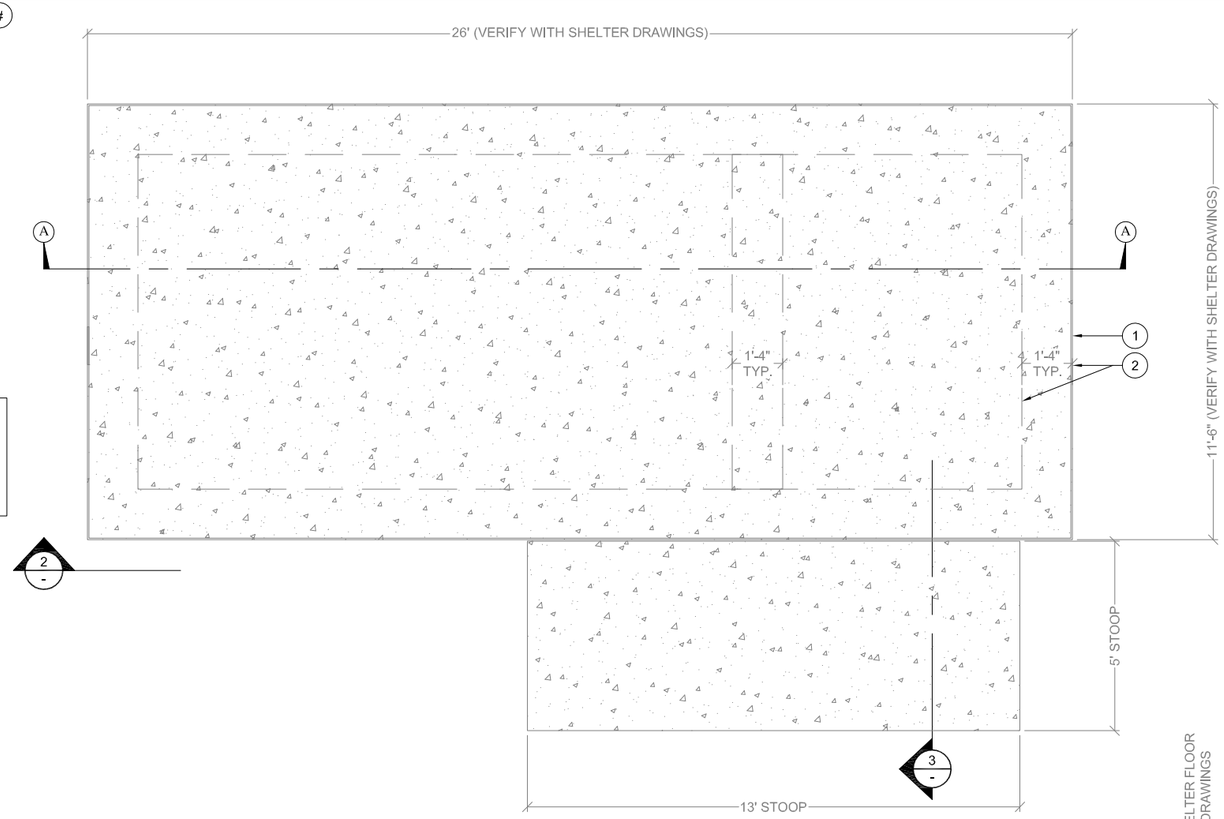

PLAN

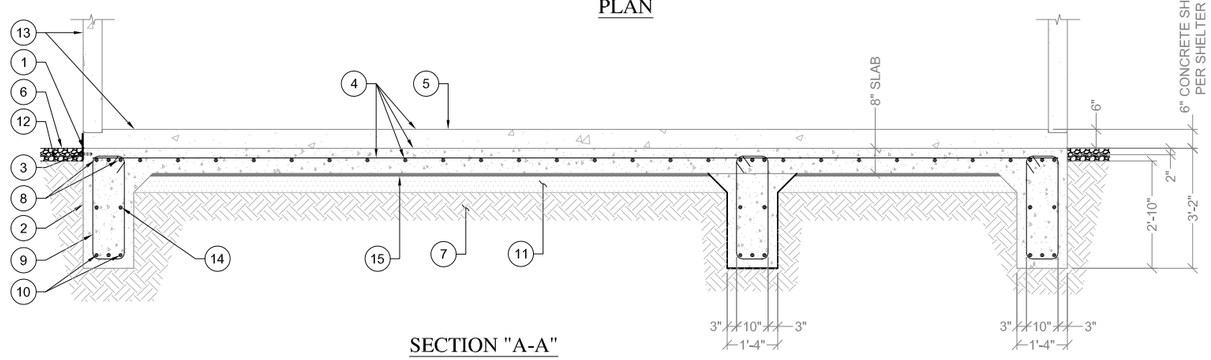

SECTION "A-A"

1 SHELTER FOUNDATION DETAIL
NTS

SHELTER ANCHOR KEYED NOTES: (#)

1. SHELTER
2. ANCHOR BOLT SUPPLIED BY MANUFACTURER (TYP.)
3. STEEL TIE DOWN PLATE PROVIDED BY SHELTER MANUFACTURER (VERIFY W/ SHELTER MANUFACTURER)
4. SHELTER FLOOR
5. FINISH GRAVEL LEVEL
6. CONCRETE TURNDOWN AT PERIMETER

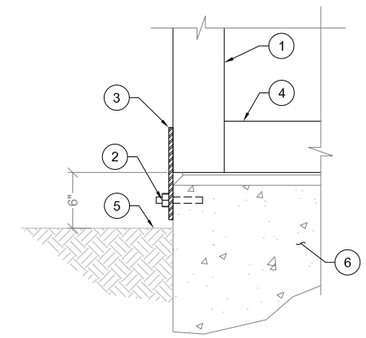

2 BUILDING ATTACHMENT DETAIL
NTS

TYPICAL CONCRETE STOOP KEYED NOTES: (#)

1. SHELTER
2. ½" NEOPRENE FILLER
3. 3" REINFORCEMENT CLEARANCE FROM SLAB PERIMETER
4. NATURAL SOIL OR BEDROCK
5. 10" SLAB WITH #4 @ 16" O.C. EACH WAY TOP & BOTTOM, SLAB FINISH 4" ABOVE FINISH GRADE
6. SHELTER FLOOR

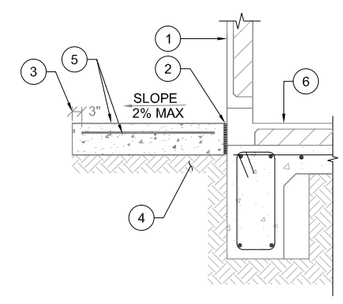

3 CONCRETE STOOP DETAIL
NTS

REV	DESCRIPTION	DATE	BY
001	50% CD	6/22/2021	ADW
002	COMMMENTS	7/9/2021	ADW
002	COMMENTS	8/12/2021	ADW

SITE NAME:
RED PEAK
SITE ADDRESS:
UNNAMED ROAD
SUN VALLEY, NV 89433

WASHOE COUNTY TECHNOLOGY SERVICES
230 EDISON WAY
RENO, NV 90502

L3HARRIS COMMUNICATIONS SYSTEMS
1421 EAST SUNSET RD, SUITE 18
LAS VEGAS, NV 89120

COMMUNICATIONS SERVICES, INC.
14350 N. 87th ST., STE. 145
SCOTTSDALE, AZ 85260
PHONE: 480.291.6824

L3HARRIS™ COMMUNICATIONS SYSTEMS
PUBLIC SAFETY & PROFESSIONAL COMMUNICATIONS

CONTRACT 16CS02712

PRELIMINARY ENGINEERING CONSTRUCTION DRAWINGS COMPANY CONFIDENTIAL

SHEET TITLE: R777-S101-X-X
DATE: 2021-07-09
PREPARED BY: ADW COMM
VERSION 002

NEVADA SHARED RADIO SYSTEM
RED PEAK
CONSTRUCTION DETAILS
PAGE A-5

COPYRIGHT © 2021 L3HARRIS TECHNOLOGIES. ALL RIGHTS RESERVED

Exhibit B

POWER TRENCH KEY NOTES: (#)

1. MATCH EXISTING SURFACE AND PER POWER COMPANY SPECS.
2. FINISHED GRADE
3. VERTICAL DEPTH W/O SHORING PER GOVERNING CODES
4. CLEAR BEDDING W/ MIN. 12" COVERAGE OVER CONDUIT
5. 2.5" PVC SCH. 40 CONDUIT FOR POWER; 12" SEPARATION FROM OTHER LINES; CONDUIT W/ GAS & FUEL LINES IN SEPARATE TRENCH; COORDINATE W/ LOCAL UTILITIES
6. WARNING TAPE 12" ABOVE CONDUIT
7. BACK FILL MATERIAL

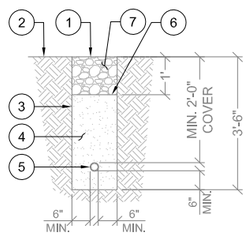

1 POWER TRENCH DETAIL
NTS

BOLLARD KEY NOTES: (#)

1. 4"Ø CONCRETE FILLED SCH40 STEEL BOLLARD
2. PLASTIC BOLLARD COVER; COLOR: YELLOW WITH (2) BLACK STRIPES
3. EXOTHERMIC WELD (TYPE VS) TO STEEL BOLLARD - SLOT CUT FOR COVER
4. #2 AWG SOLID TINNED BARE COPPER CONDUCTOR TO GROUND RING
5. FINISHED GRADE
6. NATURAL SOIL
7. CAP FOR WATERSHED

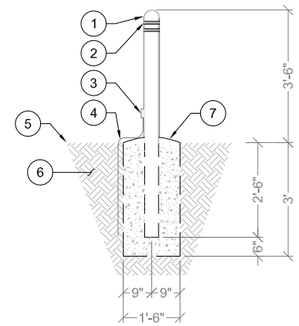

2 BOLLARD DETAIL
NTS

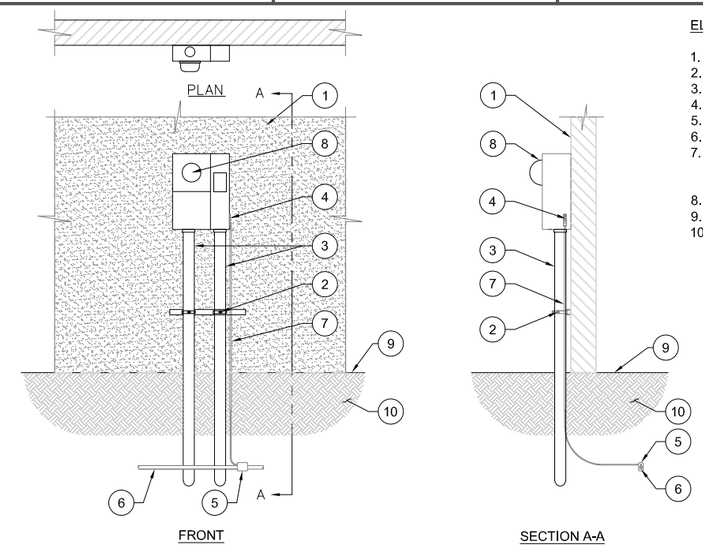

ELECTRICAL BOX ATTACHMENT KEYED NOTES: (#)

1. BUILDING
2. PIPE CLAMP (TYP.)
3. RIGID CONDUIT SCH. 80 (TYP.)
4. MECHANICAL GROUND BONDING (TYPE YA-2) (TYP.)
5. EXOTHERMIC WELD (TYPE PT) (TYP.)
6. GROUND RING
7. #2 AWG SOLID TINNED BARE COPPER CONDUCTOR ROUTED IN FLEXIBLE NON-METALLIC LIQUID TIGHT CONDUIT (CARFLEX) (TYP.)
8. METER SERVICE WITH FUSE DISCONNECT
9. FINISHED GRADE OR ASPHALT
10. NATURAL SOIL

3 METER ATTACHMENT DETAIL
NTS

GRAVEL KEY NOTES: (#)

1. 3"-6" OF ¾" BASE GRAVEL; SLOPE AWAY FROM SHELTER & TOWER (VERIFY IN FIELD)
2. FINISHED GRADE LEVEL
3. (1) LAYER OF GEO-FABRIC (MIRAFI 500X OR EQUAL)
4. NATURAL SUB-GRADE
5. NATURAL SOIL

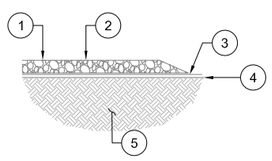

NOTE:

CONTRACTOR SHALL STRIP SUPERFICIAL, SOFT, WET, ORGANIC OR DELETERIOUS SOILS TO EXPOSE FIRM AND UNYIELDING SOIL. IF STRIPPING IS REQUIRED DEEPER THAN 6", CONTRACTOR SHALL CONTACT THE SITE CONSTRUCTION MANAGER TO DETERMINE THE APPROPRIATE STRIPPING DEPTH AT THE TIME OF CONSTRUCTION.

4 COMPOUND GRAVEL DETAIL
NTS

UTILITY TRENCH KEY NOTES: (#)

1. FINISHED GRADE
2. MATCH EXISTING SURFACE
3. VERTICAL DEPTH W/O SHORING PER GOVERNING CODES
4. CLEAR BEDDING W/ MIN. 12" COVERAGE OVER CONDUIT
5. 1-1/4"Ø PVC SCH. 40 CONDUIT FOR MONITOR LINE
6. 2Ø PVC SEAMLESS PRESSURE PIPE A106 CONDUIT FOR DIESEL LINE FROM DIESEL TANK TO GENERATOR LOCATED INSIDE OF SHELTER.
7. GROUNDING CONDUCTOR
8. WARNING TAPE 12" ABOVE CONDUIT
9. ENGINEERING FILL MATERIAL

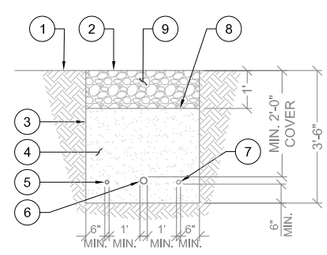

NOTE:

LOW VOLT. CONDUIT & OTHER CONDUITS. 12" MIN. SEPARATION WITH GAS AND FUEL LINES IN SEPARATE TRENCH.

5 UTILITY TRENCHING DETAIL
NTS

GENERATOR CONCRETE SLAB KEY NOTES: (#)

1. OUTLINE OF DIESEL TANK
2. 3/4" CHAMFER EDGE (TYP.)
3. 15"x25" OPENING FOR CONDUIT STUB-UP
4. ITW RED HEAD TRUBOLT + WEDGE ANCHOR 1/2" DIA. ANCHOR BOLT W/ 3-1/4" MIN EMBEDMENT (MIN. 4); VERIFY SIZE W/ MANUFACTURER SPECS.
5. 3" REINFORCEMENT CLEARANCE FROM SLAB PERIMETER
6. NATURAL SOIL
7. USE 6 MIL PLASTIC MOISTURE BARRIER
8. FINISHED GRADE LEVEL
9. 8" THK. SLAB W/ #4 @ 12" O.C. EACH WAY; SLAB FINISH 4" ABOVE GRADE

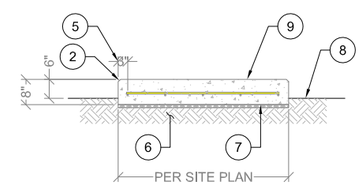

SECTION B-B

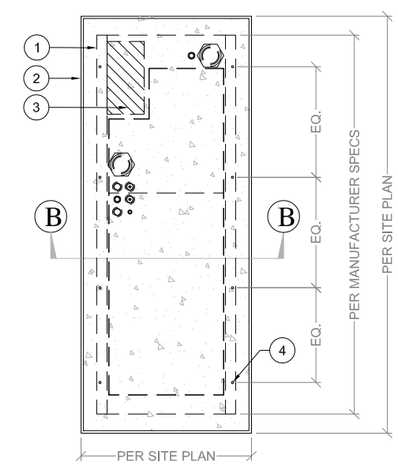

PLAN VIEW

6 DIESEL TANK CONCRETE PAD DETAIL
NTS

REV	DESCRIPTION	DATE	BY
001	50% CD	6/22/2021	ADW
002	COMMMENTS	7/9/2021	ADW
002	COMMENTS	8/12/2021	ADW

SITE NAME:

RED PEAK

SITE ADDRESS:

UNNAMED ROAD
SUN VALLEY, NV 89433

WASHOE COUNTY TECHNOLOGY SERVICES

230 EDISON WAY
RENO, NV 90502

L3HARRIS COMMUNICATIONS SYSTEMS

1421 EAST SUNSET RD, SUITE 18
LAS VEGAS, NV 89120

COMMUNICATIONS SERVICES, INC.

14350 N. 87th ST., STE. 145
SCOTTSDALE, AZ 85260
PHONE: 480.291.6824

L3HARRIS™ COMMUNICATIONS SYSTEMS
PUBLIC SAFETY & PROFESSIONAL COMMUNICATIONS

CONTRACT 16CS02712

PRELIMINARY ENGINEERING CONSTRUCTION DRAWINGS COMPANY CONFIDENTIAL

SHEET TITLE: R777-S101-X-X
DATE: 2021-07-09
PREPARED BY: ADW COMM
VERSION 002

NEVADA SHARED RADIO SYSTEM
RED PEAK
CONSTRUCTION DETAILS
PAGE A-6

COPYRIGHT © 2021 L3HARRIS TECHNOLOGIES. ALL RIGHTS RESERVED

Exhibit B

1 NOT USED
NTS

TYPICAL REINFORCING KEYED NOTES: (#)

1. 40 BAR Ø OR 2'-0" MINIMUM
2. STANDARD ACI 90° HOOK.
3. VERTICAL BAR FULL HEIGHT OF WALL TYP.
4. PVC CONTROL JOINT
5. RAKE OUT MORTAR 1/2" EACH FACE AND CAULK - TYPICAL
6. WRAP REINFORCING WITH DUCT TAPE FOR 16" EACH SIDE OF MCJ DO NOT LAP SPLICE BOND BEAM BARS WITHIN 8'-0" OF MCJ

NOTES:

1. SEE DETAILS FOR REINFORCING U.N.O.
2. ALL CELLS AND BOND BEAMS WITH REINFORCING SHALL BE GROUTED.
3. MASONRY CONTROL JOINTS SHALL EXTEND FULL HEIGHT OF CMU WALL. TERMINATE ALL HORIZONTAL REINFORCING, INCLUDING JOINT REINFORCING, AT MASONRY CONTROL JOINTS EXCEPT BOND BEAM REINFORCING.
4. BARS SHALL BE ACCURATELY LOCATED AT CENTERLINE OF WALL U.N.O. OFFSET BARS WHERE INDICATED ON PLANS AND DETAILS.

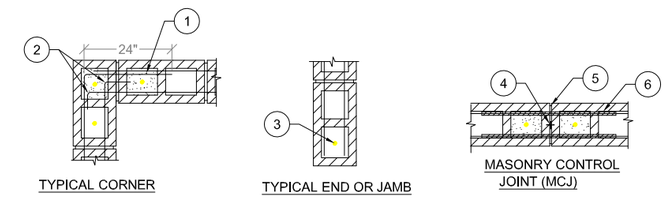

2 CMU WALL REINFORCING
NTS

TYPICAL REINFORCING KEYED NOTES: (#)

1. CORNER BARS REQ'D. ON ALL REBARS AT TOP & BOTTOM DIAMETER TO BE SAME AS GRADE BEAM REINF.

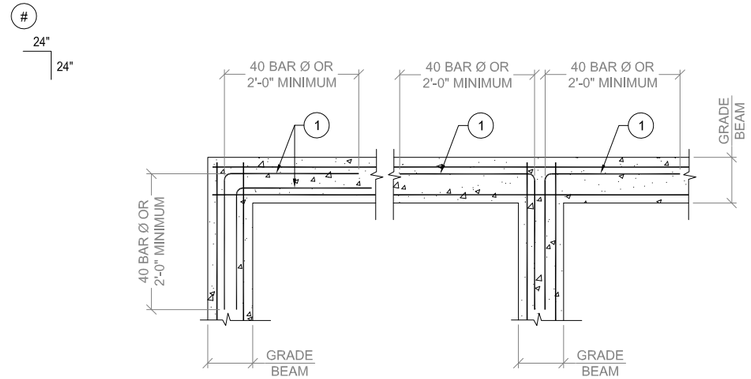

3 TYPICAL CORNER BAR DETAIL
NTS

DETAIL KEYED NOTES: (#)

1. FENCE POST
2. 1/2"Ø ALL THREAD A36 ROD (6-1/2" LONG) 5" MIN EMBEDMENT SET W/ SIMPSON 'SET' EPOXY (TYP. OF 4 PER POST) OR APPROVED EQUAL
3. 6"x8"x1/2" THK. PLATE
4. FULLY GROUTED CMU WALL

NOTE:

IT IS PERMITTED TO USE PREFABRICATED BASE PLATE AND ANCHORAGE DETAIL SUPPLIED AND ENGINEERED BY THE MANUFACTURE IN LIEU OF THIS DETAIL

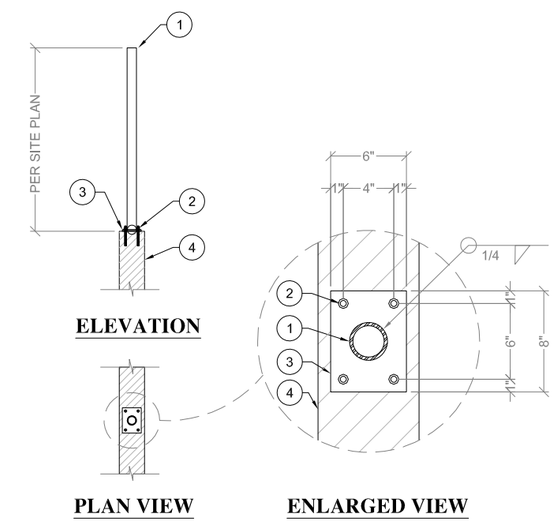

4 POST BASE DETAIL AT CMU WALL DETAIL
NTS

REV	DESCRIPTION	DATE	BY
001	50% CD	6/22/2021	ADW
002	COMMMENTS	7/9/2021	ADW
002	COMMENTS	8/12/2021	ADW

SITE NAME:
RED PEAK
SITE ADDRESS:
UNNAMED ROAD
SUN VALLEY, NV 89433

WASHOE COUNTY TECHNOLOGY SERVICES
230 EDISON WAY
RENO, NV 90502

L3HARRIS COMMUNICATIONS SYSTEMS
1421 EAST SUNSET RD, SUITE 18
LAS VEGAS, NV 89120

COMMUNICATIONS SERVICES, INC.
14350 N. 87th ST., STE. 145
SCOTTSDALE, AZ 85260
PHONE: 480.291.6824

L3HARRIS™ COMMUNICATIONS SYSTEMS
PUBLIC SAFETY & PROFESSIONAL COMMUNICATIONS

CONTRACT 16CS02712

PRELIMINARY ENGINEERING CONSTRUCTION DRAWINGS COMPANY CONFIDENTIAL

SHEET TITLE: R777-S101-X-X
DATE: 2021-07-09
PREPARED BY: ADW COMM
VERSION 002

NEVADA SHARED RADIO SYSTEM
RED PEAK
CONSTRUCTION DETAILS
PAGE A-7

COPYRIGHT © 2021 L3HARRIS TECHNOLOGIES. ALL RIGHTS RESERVED

Exhibit B

DETAIL KEYED NOTES: (#)

1. FINISHED GRADE
2. BOND BEAM PER G.S.N.
3. 8" MASONRY WALL WITH #5 VERTICALS AT 32" O.C. ON SOIL SIDE - GROUT SOLID
4. DOWELS TO MATCH AND LAP VERTICAL WALL REINFORCING PER G.S.N. - ALTERNATE BENDS
5. (2) #5 TOP AND BOTTOM - IN LONGITUDINAL DIRECTION
6. CONCRETE FOOTING
7. FINISHED GRADE AS OCCURS
8. 5'-3" MAXIMUM - FOR TOP OF WALL, SEE ELEVATIONS ON GRADING PLAN.
9. #5 HORIZONTAL @ 24" O.C.
10. #5 TOP AND BOTTOM @ 16" O.C.
11. 1-1/2"Ø WEEP HOLES @ 60" O.C.
12. 1-1/2"Ø ROCK IN 12"X12" CONTINUOUS ROCK POCKET
13. NEW FENCE POST AS OCCURS
14. 6" MINIMUM AND 15" MAXIMUM

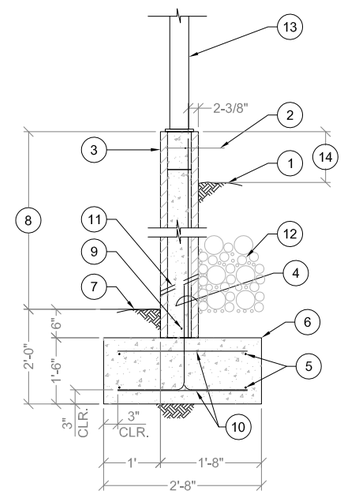

1 RETAINING WALL DETAIL (5'-3" RETAINED HEIGHT)
NTS

DETAIL KEYED NOTES: (#)

1. FINISHED GRADE
2. BOND BEAM PER G.S.N.
3. 8" MASONRY WALL WITH #5 VERTICALS AT 24" O.C. ON SOIL SIDE - GROUT SOLID
4. DOWELS TO MATCH AND LAP VERTICAL WALL REINFORCING PER G.S.N. - ALTERNATE BENDS
5. (3) #5 TOP AND BOTTOM - IN LONGITUDINAL DIRECTION
6. CONCRETE FOOTING
7. FINISHED GRADE AS OCCURS
8. 6'-3" MAXIMUM -FOR TOP OF WALL, SEE ELEVATIONS ON GRADING PLAN.
9. #5 HORIZONTAL @ 24" O.C.
10. #5 TOP AND BOTTOM @ 16" O.C.
11. 1-1/2"Ø WEEP HOLES @ 60" O.C.
12. 1-1/2"Ø ROCK IN 12"X12" CONTINUOUS ROCK POCKET
13. NEW FENCE POST AS OCCURS

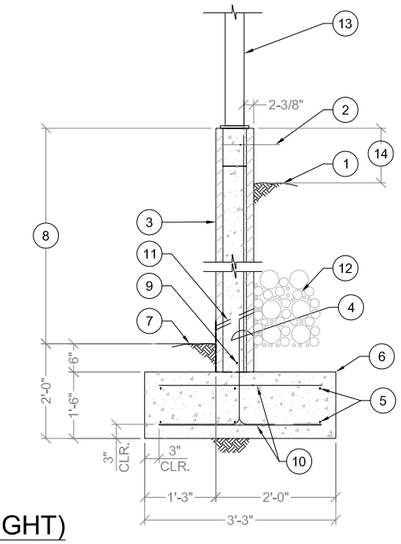

4 RETAINING WALL DETAIL (6'-3" RETAINED HEIGHT)
NTS

DETAIL KEYED NOTES: (#)

1. FINISHED GRADE
2. BOND BEAM PER G.S.N.
3. 8" MASONRY WALL WITH #5 VERTICALS AT 8" O.C. ON SOIL SIDE - GROUT SOLID
4. DOWELS TO MATCH AND LAP VERTICAL WALL REINFORCING PER G.S.N. - ALTERNATE BENDS
5. (4) #5 TOP AND BOTTOM - IN LONGITUDINAL DIRECTION
6. CONCRETE FOOTING
7. FINISHED GRADE AS OCCURS
8. 8'-3" MAXIMUM -FOR TOP OF WALL, SEE ELEVATIONS ON GRADING PLAN.
9. #5 HORIZONTAL @ 24" O.C.
10. #5 TOP AND BOTTOM @ 16" O.C.
11. 1-1/2"Ø WEEP HOLES @ 60" O.C.
12. 1-1/2"Ø ROCK IN 12"X12" CONTINUOUS ROCK POCKET
13. NEW FENCE POST AS OCCURS
14. 6" MINIMUM AND 15" MAXIMUM

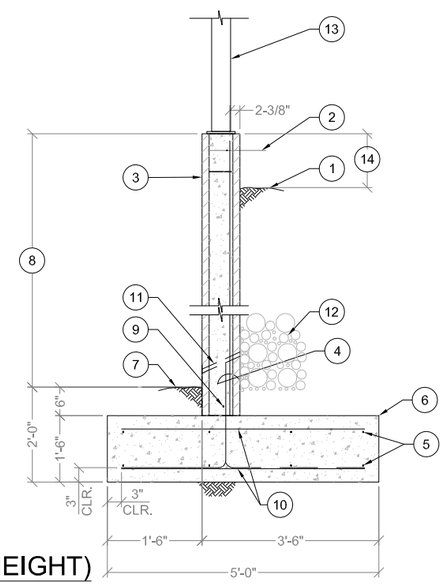

3 RETAINING WALL DETAIL (8'-3" RETAINED HEIGHT)
NTS

DETAIL KEYED NOTES: (#)

1. LAP PER G.S.N (24" MIN.) TYP.
2. TOP OF WALL FOOTING
3. RETURN TO FOOTING THICKNESS AS SHOWN ON PLAN

NOTES:

1. THIS DETAIL SHALL BE USED AS REQUIRED TO MAINTAIN FOOTING DEPTHS SHOWN ON PLANS OR DETAILS AND MAY NOT SPECIFICALLY BE REFERENCED.
2. SEE PLANS & DETAIL FOR REINFORCING AND FOOTING SIZES.
3. BOTTOM OF FOOTINGS SHALL BE STEPPED - SLOPING FOOTING BOTTOM ARE NOT PERMITTED.

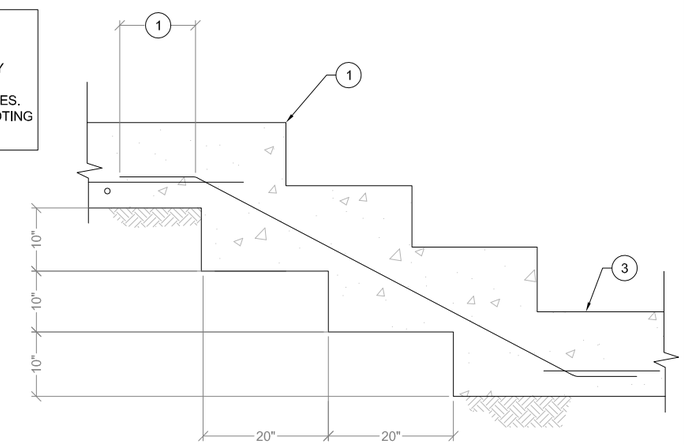

4 TYP. STEP IN CONCRETE FOOTING
NTS

REV	DESCRIPTION	DATE	BY
001	50% CD	6/22/2021	ADW
002	COMMMENTS	7/9/2021	ADW
002	COMMENTS	8/12/2021	ADW

SITE NAME:
RED PEAK
SITE ADDRESS:
UNNAMED ROAD
SUN VALLEY, NV 89433

WASHOE COUNTY TECHNOLOGY SERVICES
230 EDISON WAY
RENO, NV 90502

L3HARRIS COMMUNICATIONS SYSTEMS
1421 EAST SUNSET RD, SUITE 18
LAS VEGAS, NV 89120

COMMUNICATIONS SERVICES, INC.
14350 N. 87th ST., STE. 145
SCOTTSDALE, AZ 85260
PHONE: 480.291.6824

L3HARRIS™ COMMUNICATIONS SYSTEMS
PUBLIC SAFETY & PROFESSIONAL COMMUNICATIONS

CONTRACT 16CS02712

PRELIMINARY ENGINEERING CONSTRUCTION DRAWINGS COMPANY CONFIDENTIAL

SHEET TITLE: R777-S101-X-X
DATE: 2021-07-09
PREPARED BY: ADW COMM
VERSION 002

NEVADA SHARED RADIO SYSTEM
RED PEAK
CONSTRUCTION DETAILS
PAGE A-8

COPYRIGHT © 2021 L3HARRIS TECHNOLOGIES. ALL RIGHTS RESERVED

Exhibit B

PART 1. ELECTRICAL

1.1 CODES AND REGULATIONS

A. SEE T-1, CODES AND REGULATIONS

1.2 SCOPE OF WORK AND GENERAL REQUIREMENT:

A. PROVIDE NEW MATERIAL UNLESS OTHERWISE INDICATED. FURNISH LABOR, EQUIPMENT, TECHNICAL SUPERVISION, AND INCIDENTAL SERVICES REQUIRED TO COMPLETE, TEST AND LEAVE READY FOR OPERATION THE ELECTRICAL SYSTEMS AS SPECIFIED AND AS INDICATED ON DRAWINGS.

B. ORDINANCES AND CODES: PERFORM WORK IN ACCORDANCE WITH APPLICABLE FEDERAL, STATE AND LOCAL ORDINANCES AND REGULATIONS, THE RULES AND REGULATIONS OF NFPA, NECA, AND UL, UNLESS OTHERWISE INDICATED.

C. PROVIDE GROUNDING TO COMPLY WITH NEC & HARRIS SITE GROUNDING AND LIGHTING PROTECTION GUIDELINES.

D. UNLESS OTHERWISE INDICATED, SECURE AND PAY FOR REQUIRED PERMITS, LICENSES, INSPECTIONS, APPROVALS AND FEES FOR ELECTRICAL WORK. WORK SHALL CONFORM TO APPLICABLE CODES, RULES AND REGULATIONS.

E. THE DRAWINGS SHOW THE LOCATION AND GENERAL ARRANGEMENT OF EQUIPMENT, ELECTRICAL SYSTEMS AND RELATED ITEMS. THEY SHALL BE FOLLOWED AS CLOSELY AS ELEMENTS OF THE CONSTRUCTION WILL PERMIT.

F. EXAMINE THE DRAWINGS OF OTHER TRADES AND VERIFY THE CONDITIONS GOVERNING THE WORK ON THE JOB SITE. ARRANGE WORK ACCORDINGLY, PROVIDING SUCH FITTINGS, CONDUIT, JUNCTION BOXES AND ACCESSORIES AS MAY BE REQUIRED TO MEET SUCH CONDITIONS.

G. COORDINATE ARRANGEMENT, MOUNTING AND SUPPORT OF ELECTRICAL EQUIPMENT WITH OTHER TRADES.

H. VISIT THE SITE, EXAMINE AND VERIFY THE CONDITIONS UNDER WHICH THE WORK MUST BE CONDUCTED BEFORE SUBMITTING PROPOSAL. THE SUBMITTING OF A PROPOSAL IMPLIES THAT THE SUBCONTRACTOR HAS VISITED THE SITE AND UNDERSTANDS THE CONDITIONS UNDER WHICH THE WORK MUST BE CONDUCTED. NO ADDITIONAL CHARGES WILL BE ALLOWED BECAUSE OF FAILURE TO MAKE THIS EXAMINATION OR TO INCLUDE ALL MATERIALS AND LABOR TO COMPLETE THE WORK.

I. BASE BIDS UPON MANUFACTURED EQUIPMENT SPECIFIED. VOLUNTARY ALTERNATES MAY BE SUBMITTED FOR CONSIDERATION, WITH LISTED ADDITION OR DEDUCTION TO THE BID.

J. PROVIDE WARRANTY THAT THE ELECTRICAL INSTALLATION IS FREE FROM DEFECTS AND AGREES TO REPLACE OR REPAIR, TO THE OWNER'S SATISFACTION, ANY PART OF THIS ELECTRICAL INSTALLATION WHICH BECOMES DEFECTIVE WITHIN A PERIOD OF ONE YEAR FROM THE DATE OF SUBSTANTIAL COMPLETION FOLLOWING FINAL ACCEPTANCE, PROVIDED THAT SUCH FAILURE IS DUE TO DEFECTS IN THE EQUIPMENT, MATERIAL, WORKMANSHIP OR FAILURE TO FOLLOW THE CONTRACT DOCUMENTS.

K. FILE WITH THE OWNER WARRANTIES FROM THE EQUIPMENT MANUFACTURERS INCLUDING THE OPERATING CONDITIONS AND PERFORMANCE CAPACITIES THEY ARE BASED ON.

L. SUBCONTRACTOR SHALL BE RESPONSIBLE FOR ANY TEMPORARY SERVICES INCLUDING EQUIPMENT AND INSTALLATION REQUIRED TO MAINTAIN OPERATION AS A RESULT OF ANY EQUIPMENT FAILURE OR DEFECT DURING WARRANTY PERIOD.

M. IN GENERAL, DEMOLITION WORK IS INDICATED ON THE DRAWINGS. HOWEVER, THE SUBCONTRACTOR SHALL VISIT THE JOB SITE TO DETERMINE THE FULL EXTENT AND CHARACTER OF THIS WORK.

N. UNLESS SPECIFICALLY NOTED TO THE CONTRARY, REMOVED MATERIALS SHALL NOT BE REUSED IN THE WORK. SALVAGED MATERIALS THAT ARE TO BE REUSED SHALL BE STORED SAFE AGAINST DAMAGE AND TURNED OVER TO THE APPROPRIATE TRADE FOR REUSE. SALVAGED MATERIALS OF VALUE THAT ARE NOT TO BE REUSED SHALL REMAIN THE PROPERTY OF THE OWNER UNLESS SUCH OWNERSHIP IS WAIVED. ITEMS ON WHICH THE OWNER WAIVES OWNERSHIP SHALL BECOME THE PROPERTY OF THE SUBCONTRACTOR, WHO SHALL REMOVE AND LEGALLY DISPOSE OF SAME, AWAY FROM THE PREMISES.

O. CONSULT WITH THE OWNER'S REPRESENTATIVE AS TO THE METHODS OF CARRYING ON THE WORK SO AS NOT TO INTERFERE WITH THE OWNER'S OPERATION ANY MORE THAN ABSOLUTELY NECESSARY. ACCORDINGLY, ALL SERVICE LINES SHALL BE KEPT IN OPERATION AS LONG AS POSSIBLE AND THE SERVICES SHALL ONLY BE INTERRUPTED AT SUCH TIME AS WILL BE DESIGNATED BY THE OWNER'S REPRESENTATIVE.

P. ALL CUTTING, PATCHING AND REPAIR WORK SHALL BE PERFORMED BY THE QUALIFIED SUBCONTRACTORS. SUBCONTRACTOR SHALL INCLUDE FULL COST OF SAME IN BID.

Q. PROVIDE ALL EXCAVATION, TRENCHING, TUNNELING, DEWATERING AND BACKFILLING REQUIRED FOR THE ELECTRICAL WORK. COORDINATE THE WORK WITH OTHER EXCAVATING AND BACKFILLING IN THE SAME AREA.

R. INSPECT THE INSTALLATION OF ALL EQUIPMENT PER THE MANUFACTURER'S RECOMMENDATION AND APPLICABLE CODES.

S. PROVIDE UL APPROVED FIRE-STOPPING SYSTEM FOR ALL PENETRATIONS PASSING THROUGH FIRE RATED ASSEMBLIES.

T. COMPLY WITH NECA 1.

U. PROVIDE COMPLETE OPERATION AND MAINTENANCE INSTRUCTIONAL MANUALS COVERING ALL ELECTRICAL EQUIPMENT HEREIN SPECIFIED, TOGETHER WITH PARTS LISTS.

V. SUBCONTRACTOR SHALL SUBMIT TO THE ARCHITECT/ENGINEER, RECORD DRAWINGS ON ELECTRONIC MEDIA OR MYLAR WHICH HAVE BEEN NEATLY MARKED TO REPRESENT AS-BUILT CONDITIONS FOR ALL NEW ELECTRICAL WORK.

W. SUBMIT FOR APPROVAL SHOP DRAWINGS FOR ALL ELECTRICAL SYSTEMS OR EQUIPMENT BUT NOT LIMITED TO THE ITEMS LISTED BELOW:

1. PANELBOARDS
2. TRANSFORMERS
3. MOTOR CONTROL
4. DISCONNECT SWITCHES
5. TIME SWITCHES
6. WIRING DEVICES
7. LIGHTING FIXTURES
8. LIGHTING CONTROL SYSTEMS AND DEVICES
9. SURFACE RACEWAYS
10. FIRE ALARM SYSTEM

X. PROVIDE AND INSTALL ARC-FLASH HAZARD LABELS ON EACH ELECTRICAL EQUIPMENT AND ENCLOSURES DEFINED BY NFPA 70E. LABELS SHALL COMPLY WITH THE REQUIREMENTS OF NFPA 70E AND CONTAIN AS A MINIMUM:

1. VOLTAGE (PHASE-PHASE)
2. FLASH PROTECTION BOUNDARY (INCHES)
3. INCIDENT ENERGY LEVEL AT THE WORKING DISTANCE (CA/CM2)
4. PERSONNEL PROTECTIVE EQUIPMENT (PPE) CLASS AND DESCRIPTION.
5. RESTRICTED APPROACH BOUNDARY (INCHES)
6. LIMITED SHOCK APPROACH BOUNDARY (INCHES)
7. PROHIBITED SHOCK APPROACH BOUNDARY (INCHES)

PART 2. INSPECTIONS

A. INFORM L3HARRIS OF INSPECTIONS 48 HOURS IN ADVANCE. ALL TICKETS AND INSPECTION CERTIFICATES/VERIFICATIONS WILL BE SUBMITTED TO L3HARRIS WITHIN 24 HOURS AFTER INSPECTION HAS TAKEN PLACE.

B. INSPECTIONS REQUIRED - AS PER LAWS AND REGULATIONS OF LOCAL AND/OR STATE AGENCIES HAVING JURISDICTION AT PROJECT SITE.

C. INSPECTION AGENCY - APPROVED BY LOCAL AND/OR STATE AGENCIES HAVING JURISDICTION AT PROJECT SITE.

PART 3. ELECTRICAL SERVICE

A. L3HARRIS, INC WILL ORDER THE ELECTRIC SERVICE.

B. SUBCONTRACTOR SHALL ARRANGE WITH UTILITY COMPANY AND LOCAL/GOVERNING JURISDICTION FOR TIMELY INSTALLATION OF TEMPORARY ELECTRIC SERVICE (IF REQUIRED) AND PERMANENT ELECTRIC SERVICES. COMPLY WITH AND COORDINATE ALL REQUIREMENTS OF UTILITY COMPANY.

B.1 ARRANGE FOR INSPECTION OF ELECTRICAL SERVICE BY THE LOCAL/GOVERNING JURISDICTION. OBTAIN CERTIFICATE OF INSPECTION. FURNISH COPY OF CERTIFICATE TO THE LOCAL/GOVERNING JURISDICTION AND A COPY TO THE UTILITY COMPANY.

B.2 COORDINATE METER SOCKET REQUIREMENTS WITH THE LOCAL/GOVERNING JURISDICTION AND ELECTRIC UTILITY.

C. PROVIDE EQUIPMENT WITH HIGHER FAULT CURRENT RATINGS AS NEEDED TO MATCH UTILITY COMPANY'S AVAILABLE FAULT CURRENT.

PART 4. EXECUTION

A. ON ANY COLLOCATION SITE, SUBCONTRACTOR & ALL ASSIGNED SHALL NOT USE EXISTING POWER OR TAMPER WITH ANY EQUIPMENT BELONGING TO ANY OTHER AGENCY. FAILURE TO ADHERE WILL CAUSE IMMEDIATE DISMISSAL OF SUBCONTRACTOR FROM PROJECT.

B. PULL BOXES - PROVIDE PULL BOXES AS INDICATED AND WHERE REQD. BY CODES AND UTILITY COMPANIES. BOXES FOR GENERAL INDOOR USE (DRY LOCATIONS) TO BE GALVANIZED CODE GAUGE STEEL CONSTRUCTION MIN. 4" SQUARE X 1-1/2" DEEP WITH SCREW-ON COVERS. WIREWAYS TO BE UL LISTED, SHEET STEEL CONSTRUCTION WITH SCREW-ON COVERS. FOR EXTERIOR AND DAMP OR WET INDOOR LOCATIONS, USE BOXES AND WIREWAYS APPROVED FOR SUCH USE. INSTALL OUTLET PULL & JUNCTION BOXES RIGIDLY, PLUMB AND LEVEL. SUPPORT & SECURE BOXES INDEPENDENTLY FROM CONDUITS TERMINATING AT BOX. INSTALL ALL BOXES SO AS TO BE ACCESSIBLE AND SO THAT COVERS MAY BE EASILY REMOVED.

C. OUTLET BOXES (SURFACE MOUNTED) - CADMIUM PLATED CAST OR MALLEABLE IRON.

D. POWER CONDUCTORS - SUBCONTRACTOR SHALL CONDUCT CONTINUITY & INSULATION TEST ON CONDUCTORS BETWEEN SERVICE DISCONNECT & POWER CABINET.

PART 5. RACEWAYS AND CONDUITS

A. CONDUITS & FITTINGS AT OUTSIDE APPLICATIONS SHALL BE RIGID OR NONMETALLIC UNLESS OTHERWISE NOTED. CONDUITS & FITTINGS AT INSIDE BUILDING RUN ABOVE CEILINGS AND SHALL BE ELECTRICAL METALLIC TUBING (EMT). SUPPORT CONDUITS WITHIN 3' OF JUNCTION BOXES & 8' INTERVALS OR LESS AS NEEDED WITH APPROVED ANCHORING DEVICES.

B. ALL SWEEPS OR BENDS, AND ABOVEGROUND CONDUITS SHALL BE RIGID GALVANIZED STEEL OR PVC SCHEDULE 40.

C. PROVIDE CAP TO PREVENT ENTRY OF MATERIALS & MOISTURE FOR ALL SPARE CONDUITS. CONDUIT RISERS MUST INCLUDE SLIP TYPE EXPANSION JOINT.

D. CONDUIT SEALS - INSTALL CONDUIT SEAL FOR EACH CONDUIT PENETRATING AT AN EXTERIOR BUILDING WALL, BELOW GRADE (UNLESS PENETRATION IS BELOW LOWEST BUILDING FLOOR SLAB), AND ELSEWHERE AS INDICATED, AND SO AS TO ACHIEVE A SEALED WATERTIGHT INSTALLATION.

E. RIGID GALVANIZED STEEL CONDUIT SHALL BE USED IN AREAS SUBJECT TO PHYSICAL DAMAGE. CUT ENDS WILL BE REAMED, THREADED AND COLD GALVANIZED (COMPRESSION FITTINGS WILL NOT BE ACCEPTED).

F. LIQUID TIGHT FLEXIBLE STEEL CONDUIT - USE WHERE FLEXIBLE STEEL CONDUIT CONNECTIONS ARE REQUIRED IN DRY, DAMP, WET, OR OILY LOCATIONS, FOR CONNECTIONS TO TRANSFORMERS, VIBRATING EQUIPMENT, EQUIPMENT REQUIRING MINOR ADJUSTMENTS TO POSITIONS, AND FOR FINAL CONNECTIONS TO ALL MOTORS AND SIMILAR EQUIPMENT.

G. CONDUIT SEALS FOR CAST-IN-PLACE CONCRETE APPLICATIONS SHALL BE AN APPROVED MANUFACTURER.

PART 6. CONDUCTORS AND CABLES

A. ALL WIRES SHALL BE COPPER; USE OF ALUMINUM CONDUCTORS WILL NOT BE PERMITTED WITHOUT WRITTEN PERMISSION FROM L3HARRIS. SEE ELECTRICAL PLANS FOR SIZING AND LOCATIONS. USE PROPER SIZE CONNECTORS PER LOCAL, STATE, AND NATIONAL CODES.

B. CONDUCTOR LENGTHS SHALL BE CONTINUOUS FROM TERMINATION TO TERMINATION WITHOUT SPLICES.

C. MIN. CONDUCTOR SIZE--ALL BRANCH CIRCUIT AND CONTROL CIRCUIT WIRE SHALL BE AS SPECIFIED ON PLANS. PROVIDE LARGER SIZES, AS INDICATED OR REQUIRED. FULL SIZED EQUIPMENT GROUNDING CONDUCTOR WILL BE INSTALLED IN POWER AND LIGHTING CONDUITS.

D. INSTALL WIRING IN CONDUIT OR OTHER SPECIFIED RACEWAY U.N.O. ROMEX, BX, AC AND MC TYPE CABLES ARE NOT ALLOWED.

E. FURNISH AND INSTALL TERMINATIONS (INCLUDING LUGS IF NECESSARY) TO MAKE ELECTRICAL CONNECTIONS INDICATED OR REQUIRED. EXTERIOR AND SWITCH GEAR TERMINATIONS SHALL HAVE AN ANTIOXIDANT APPLIED. SPRING TYPE WIRE CONNECTORS USED IN EXTERIOR BOXES SHALL BE SILICONE FILLED.

PART 7. WIRING DEVICES

A. STRAIGHT-BLADE-TYPE RECEPTACLES: COMPLY WITH NEMA WD 1, NEMA WD 6, DSCC W-C-596G, AND UL 498. CONFIGURATION 5-20R DUPLEX RECEPTACLE. HUBBELL HBL 5352 OR EQUAL BY PASS & SEYMOUR OR LEVITON.

B. GFCI RECEPTACLES: STRAIGHT BLADE, FEED-THROUGH TYPE, GENERAL DUTY GRADE, WITH INTEGRAL NEMA WD 6, CONFIGURATION 5-20R DUPLEX RECEPTACLE; COMPLYING WITH UL 498 AND UL 943. DESIGN UNITS FOR INSTALLATION IN A 2-3/4-INCH- (70-MM-) DEEP OUTLET BOX WITHOUT AN ADAPTER. HUBBELL GF5352 OR EQUAL BY PASS & SEYMOUR OR LEVITON.

C. WALL SWITCHES: SINGLE AND DOUBLE-POLE SWITCHES: COMPLY WITH DSCC W-C-896F AND UL 20. HUBBELL WIRING DEVICE, KELLEMS 1220 SERIES OR EQUAL BY PASS & SEYMOUR OR LEVITON.

D. WALL PLATES: PROVIDE STAINLESS STEEL WALL PLATES.

E. WIRING DEVICE COLOR AS SELECTED BY ARCHITECT UNLESS OTHERWISE INDICATED OR REQUIRED BY NFPA 70.

F. CONNECT WIRING DEVICE GROUNDING TERMINAL TO OUTLET BOX WITH BONDING JUMPER. USE OF QUICK GROUND STRAP OR SCREW IS NOT ACCEPTABLE.

G. RECEPTACLES: IDENTIFY PANELBOARD AND CIRCUIT NUMBER FROM WHICH SERVED. USE ADHESIVE LABEL WITH BLACK FILLED LETTERING ON FACE OF WALL PLATE, AND DURABLE WIRE MARKERS OR TAGS INSIDE OUTLET BOXES.

PART 8. ELECTRICAL IDENTIFICATION AND LABELING

A. ALL EQUIPMENT, WIRING, AND MATERIALS MUST HAVE A UL LABEL.

B. WIRES SHALL BE TAGGED AT ALL PULL BOXES, J-BOXES, EQUIPMENT BOXES, AND CABINETS WITH APPROVED PLASTIC TAGS.

C. BREAKERS IN LOAD CENTER SHALL BE IDENTIFIED WITH TYPE WRITTEN LABELS NEATLY PLACED ALONG SIDE OF BREAKER.

D. NAME PLATES - THREE-LAYER LAMINATED PLASTIC WITH MINIMUM 3/15" HIGH WHITE ENGRAVED CHARACTERS ON BLACK BACKGROUND AND PUNCHED FOR MECHANICAL FASTENING.

E. WIRE TAGS - VINYL OR VINYL-CLOTH SELF-ADHESIVE WRAPAROUND TYPE INDICATING APPROPRIATE CIRCUIT NUMBER, ETC.

PART 9. ENCLOSURES

A. DRY LOCATION, INDOOR - NEMA 1.

B. WET LOCATION OR OUTDOOR - NEMA 3R.

C. EXTERIOR ENCLOSURES SHALL ACCOMMODATE SNOW LOADS.

PART 10. DEVICES

A. RECEPTACLES - 20 AMP, 125V, NEMA 5-20R DUPLEX TYPE. FOR INDOOR MOUNTED, USE STAINLESS STEEL COVER. FOR OUTDOOR OR WET LOCATION MOUNTED, USE DEVICE RATED FOR USE. PROVIDE GFCI TYPE WITH SOLID STATE GROUND FAULT SENSING & 5 MA TRIP FOR OUTDOOR OR WET LOCATIONS.

B. 20 AMP, 120-277 VOLTS, A.C. ONLY TOGGLE TYPE, SINGLE POLE, DOUBLE POLE, 3-WAY, OR 4-WAY TIMER STYLE AS INDICATED OR REQUIRED.

PART 11. FUSES

A. OBTAIN FUSES FROM A SINGLE MANUFACTURER.

B. COORDINATE FUSE RATINGS WITH UTILIZATION EQUIPMENT NAMEPLATE LIMITATIONS OF MAXIMUM FUSE SIZE.

C. EXAMINE UTILIZATION EQUIPMENT NAMEPLATES AND INSTALLATION INSTRUCTIONS. INSTALL FUSES OF SIZES AND WITH CHARACTERISTICS APPROPRIATE FOR EACH PIECE OF EQUIPMENT.

D. INSTALL LABELS INDICATING FUSE REPLACEMENT INFORMATION ON INSIDE DOOR OF EACH FUSED SWITCH.

E. SUBJECT TO COMPLIANCE WITH REQUIREMENTS, PROVIDE PRODUCTS BY COOPER BUSSMAN, INC. OR EQUAL.

F. CARTRIDGE FUSES: NEMA FU 1, NONRENEWABLE CARTRIDGE FUSE; CLASS AND CURRENT RATING INDICATED; VOLTAGE RATING CONSISTENT WITH CIRCUIT VOLTAGE.

1. SERVICE ENTRANCE: CLASS L, TIME DELAY.
2. FEEDERS: CLASS RK5 TIME DELAY .
3. MOTOR BRANCH CIRCUITS: CLASS RK1, TIME DELAY.
4. OTHER BRANCH CIRCUITS: CLASS RK1, TIME DELAY.

G. COMPLY WITH:

1. NEMA FU 1 - LOW VOLTAGE CARTRIDGE FUSES.
2. NFPA 70 - NATIONAL ELECTRICAL CODE.
3. UL 198C - HIGH-INTERRUPTING-CAPACITY FUSES, CURRENT-LIMITING TYPES.
4. UL 198E - CLASS R FUSES.
5. UL 512 - FUSEHOLDERS

PART 12. LOAD CENTER/PANEL BOARDS

A. GENERAL - TWO-ROW CIRCUIT BREAKER WITH MAINS, RATINGS AND BRANCH DEVICES AS INDICATED.

B. MINIMUM 10,000 AIC FOR 208V/240V UNLESS OTHERWISE NOTED.

LOCKABLE COVER, COPPER BUS.

D. LOAD CENTER SHALL HAVE MAIN CIRCUIT BREAKER (LOCKABLE IN ON & OFF POSITIONS).

E. COPPER GROUND BARS (ALUMINUM COMPONENTS IN ELECTRICAL DEVICES IS PROHIBITED). ISOLATED NEUTRAL BUS AND FULL SIZE GROUNDING BUS.

F. ACCEPTABLE MFGRS - GE, SQUARE D TYPE QC, SEIMENS, OR EQUIVALENT.

PART 13. SAFETY SWITCHES

A. USE HEAVY DUTY HORSEPOWER RATED, FULLY ENCLOSED, FUSIBLE (WITH REJECTION FUSE CLIPS) OR NON-FUSED AS INDICATED, QUICK-MAKE, QUICK BREAK SWITCHING MECHANISM INTERLOCKED WITH COVER AND NEMA1 ENCLOSURE FOR DRY LOCATIONS, AND NEMA 3R ENCLOSURE FOR OUTDOOR LOCATIONS, UNLESS INDICATED OTHERWISE. SWITCHES LABELED AS "SUITABLE FOR USE AS SERVICE ENTRANCE EQUIPMENT" WHERE REQUIRED.

B. RATINGS - VOLTAGE, PHASES, AMPERAGES AND FUSING AS INDICATED.

C. IN FUSED CONFIGURATION, SWITCHES SHALL HAVE INTERRUPTING CAPACITY OF AT LEAST 100,000 AMPS SYMMETRICAL AT 600 VOLTS WHEN USED WITH CLASS RK5 TIME DELAY CURRENT LIMITING FUSES, AND 200,000 AMPS SYMMETRICAL AT 600 VOLTS WHEN USED WITH RK1 CURRENT LIMITING FUSES.

D. GUARDS - LINE SHIELD GUARDS TO PREVENT CONTACT WITH LIVE PARTS.

E. CONTACTS - SILVER ALLOY: SWITCH BLADES SHALL BE DE-ENERGIZED IN OPEN POSITION

F. LUGS - SOLDERLESS TYPE.

G. REJECTION FUSE CLIPS - PROVIDE FOR FUSIBLE SWITCHES (30-600A) TO PREVENT INSTALLATION OF CLASS H AND CLASS K NON-CURRENT LIMITING FUSES.

H. ACCEPTABLE MFGRS - GENERAL ELECTRIC, SQUARE D TYPE QC, SIEMENS.

I. UL CLASS RK1, 250 VOLT OR 600 VOLT AS REQUIRED FOR SYSTEM VOLTAGE, DUAL ELEMENT, TIME DELAY CURRENT-LIMITING, 200,000 AIC, AMPERE RATINGS AS INDICATED. SIZE AND QUANTITY AS INDICATED ON POWER DIAGRAM.

REV	DESCRIPTION	DATE	BY
001	50% CD	6/22/2021	ADW
002	COMMMENTS	7/9/2021	ADW
003	COMMENTS	8/12/2021	ADW

SITE NAME:

RED PEAK

SITE ADDRESS:

UNNAMED ROAD
SUN VALLEY, NV 89433

WASHOE COUNTY TECHNOLOGY SERVICES

230 EDISON WAY
RENO, NV 90502

L3HARRIS COMMUNICATIONS SYSTEMS

1421 EAST SUNSET RD, SUITE 18
LAS VEGAS, NV 89120

COMMUNICATIONS SERVICES, INC.

14350 N. 87th ST., STE. 145
SCOTTSDALE, AZ 85260
PHONE: 480.291.6824

L3HARRIS™ COMMUNICATIONS SYSTEMS
PUBLIC SAFETY & PROFESSIONAL COMMUNICATIONS

CONTRACT
16CS02712

PRELIMINARY ENGINEERING CONSTRUCTION DRAWINGS COMPANY CONFIDENTIAL

SHEET TITLE: R777-S101-X-X	NEVADA SHARED RADIO SYSTEM
DATE: 2021-07-09	RED PEAK
PREPARED BY: ADW COMM	ELECTRICAL NOTES
VERSION 003	PAGE E-1

COPYRIGHT © 2021 L3HARRIS TECHNOLOGIES. ALL RIGHTS RESERVED

Exhibit B

PART 14. SURGE SUPPRESSION

A. FURNISHED BY OWNER/CLIENT. INSTALLED BY SUBCONTRACTOR.

GROUNDING SYSTEM FOR EACH SITE SHALL BE TESTED FOR GROUND RESISTANCE OF 5 OHMS OR LESS . ONE OF THREE TESTS SHALL BE USED--IEEE FALL-OF-POTENTIAL TEST, APPROVED CLAMP ON TEST, OR DIRECT METHOD (TWO-TERMINAL) "CONTINUITY" TEST. FALL-OF-POTENTIAL TEST IS PREFERRED TESTING METHOD AND SHALL BE USED WHENEVER POSSIBLE. ANY GROUND RESISTANCE OF GREATER THAN 5 OHMS BUT LESS THAN 25 OHMS SHALL BE REVIEWED BY L3HARRIS AND IS SUBJECT TO FINAL APPROVAL BY OWNER/CLIENT ON A CASE-BY-CASE BASIS.

PART 15. GROUNDING & BONDING

15.1 CODES AND REGULATIONS - SEE T-1, CODES AND REGULATIONS

15.2 GENERAL

A. GROUNDING NETWORK SYSTEM SHALL ESTABLISH AN EARTH-RESISTANCE TO REFERENCE GROUND POINT NOT TO EXCEED 5 OHMS FOR BUILDING UNLESS OTHERWISE NOTED, CONSISTING OF BONDING OF STRUCTURE AND OTHER METAL OBJECTS INCLUDING GROUNDING ELECTRODES AND INTERCONNECTING CONDUCTORS.

A.1 SUBCONTRACTOR SHALL VERIFY WITH L3HARRIS THAT ALL CONDUIT SYSTEMS, EQUIPMENT, DEVICES, PANELS, LINES, TRAYS, BRIDGES, PLATFORMS, AND ALL ITEMS ARE GROUNDED PROPERLY.

A.2 GROUNDING NETWORK SYSTEM SHALL INCLUDE ELECTRICAL TRENCHING, BACK FILL AND COMPACTION, GROUNDING WIRE, GROUNDING ELECTRODES AND ALL NECESSARY MATERIALS AND LABOR REQUIRED TO COMPLETE SPECIFIED SYSTEM.

15.3 TESTING

A. I.E.E.E. FALL-OF-POTENTIAL-TESTS–CONDUCT A "3-POINT" FALL OF POTENTIAL GROUND TEST WITH AEMC MODEL #4500 TESTER OR EQUIVALENT METHOD OF USING TWO AUXILIARY GROUND RODS (AS DESCRIBED IN I.E.E.E. STANDARD #81 - 1983, PART 1). AUXILIARY TEST RODS MUST BE SUFFICIENTLY FAR AWAY FROM RODS SO THAT REGIONS IN WHICH THEIR RESISTANCE IS LOCALIZED DO NOT OVERLAP.

B. SUBCONTRACTOR SHALL VERIFY THAT SYSTEM IS EFFECTIVELY GROUNDED, MEETS NEC ARTICLE 250 REQUIREMENTS, AND IS ACCEPTABLE TO LOCAL UTILITY & LOCAL AUTHORITY HAVING JURISDICTION.

C. INSTALLED SYSTEM SHALL ACHIEVE GROUND RESISTANCE OF LESS THAN 5 OHMS. RECORD GROUND RESISTANCE TEST RESULTS ON L3HARRIS "GROUND RESISTANCE TEST" FORM DELIVERABLE TO L3HARRIS REPRESENTATIVE & ENGINEER. GROUND TEST SHALL BE WITNESSED BY L3HARRIS REPRESENTATIVE. L3HARRIS REPRESENTATIVE SHALL BE INFORMED 48 HOURS IN ADVANCE OF TESTING. ANY GROUND RESISTANCE OF GREATER THAN 5 OHMS BUT LESS THAN 25 OHMS SHALL BE REVIEWED BY L3HARRIS AND IS SUBJECT TO FINAL APPROVAL BY OWNER/CLIENT ON A CASE-BY-CASE BASIS.

D. WHEN USING OR CONNECTING TO EXISTING GROUND RING, TEST GROUND RING PRIOR TO AND AFTER CONNECTION.

E. CLAMPS, SLEEVES, AND SUPPORTS USED TO SUPPORT OR CHANNEL GROUNDING SYSTEM CONDUCTORS AND PVC CONDUITS SHALL BE PVC TYPE NON- CONDUCTIVE. DO NOT USE METAL BRACKETS OR SUPPORTS THAT WOULD FORM A COMPLETE RING AROUND ANY GROUNDING CONDUCTOR.

15.4 EXECUTION

A. GROUND BARS SHALL BE 4" X 1/4" X LENGTH, UNLESS OTHERWISE NOTED AND SHALL BE TINNED COPPER AND LARGE ENOUGH TO ACCOMMODATE REQUIRED NUMBER OF GROUNDING CONNECTIONS. HARDWARE SECURING GROUND BARS SHALL BOND TO STRUCTURE TO WHICH THEY ARE FASTENED.

B. GROUND BARS SHALL BE 4" X 1/4" X LENGTH, UNLESS OTHERWISE NOTED AND SHALL BE TINNED COPPER AND LARGE ENOUGH TO ACCOMMODATE REQUIRED NUMBER OF GROUNDING CONNECTIONS. HARDWARE SECURING GROUND BARS SHALL BOND TO STRUCTURE TO WHICH THEY ARE FASTENED.

C. IF ROCK IS ENCOUNTERED, GROUND ROD SHALL BE INSTALLED IN 2" DIAMETER DRILLED HOLE TO REQUIRED DEPTH AND BACK FILLED WITH APPLICATIONS OF MAGNESIUM SULFATE OR COPPER SULFATE (IF CHEMICAL GROUNDING IS NOT USED).

D. GROUNDING WIRE SHALL NOT BEND LESS THAN 90° IN ANY LOCATION WITH AMIN. BEND RADIUS OF 8".

E. PROVIDE CORROSION PROOFING PAINT ON SURFACES EXPOSED DURING INSTALLATION.

F. ANTENNA CABLES SHALL BE GROUNDED AT TOP, BOTTOM AND 75 FEET OF VERT. RUN FOR LIGHTNING PROTECTION. ANTENNA CABLE SHIELD SHALL BE BONDED TO COPPER GROUND BAR AT THE LOWER MOST POINT OF A VERTICAL RUN JUST BEFORE IT BEGINS TO BEND TOWARD THE HORIZONTAL PLANE. WIRE RUNS TO GROUND SHALL BE KEPT AS STRAIGHT AND SHORT AS POSSIBLE. ANTENNA CABLE SHIELD SHALL BE GROUNDED JUST BEFORE ENTERING SHELTER. TOWERS WITH MULTIPLE BROADCAST TRANSMITTERS PRESENT AND OVER 200' SHALL ALSO BE EQUIPPED WITH ADDITIONAL GROUNDING.

15.5 CONNECTIONS

A. GROUND CONNECTIONS SHALL CONFORM TO I.E.E.E. STD 837 AND/OR UL467 PROTECTED FROM CORROSION AS NOTED ON DRAWINGS. USE CADWELD OR DOUBLE LUG FOR OUTDOORS ABOVE & BELOW GRADE, INDOORS, AND ON ROOF INSTALLATIONS, AS INDICATED IN PLANS.

B. CLAMP CONNECTIONS SHALL BE MADE ACCESSIBLE FOR INSPECTION. USE ONLY WHERE SPECIFIED.

C. UNDERGROUND CONNECTIONS SHALL BE INSPECTED BY L3HARRIS REPRESENTATIVE PRIOR TO BACK FILLING. PHOTOS WITH TAPE MEASUREMENT REQUIRED FOR CLOSEOUT PACKAGE.

D. ALL BELOW GROUND CONNECTIONS SHALL BE CADWELD. PROVIDE CORROSION PROTECTION TO CONNECTION AREA, IF INDICATED IN PLANS.

E. ABOVEGROUND CONNECTIONS SHALL BE BOLTED CLAMP OR BURNDY CONNECTIONS UNLESS OTHERWISE NOTED.

F. GROUND CONNECTIONS TO GROUND BAR SHALL BE MADE WITH DOUBLE HOLE HYDRAULICALLY INDENTED LUGS, EXCEPT FOR CADWELDS, AS SHOWN IN PLANS.

F.1 TO ENSURE ADEQUATE BOND WHERE GROUND CONNECTIONS ARE MADE, CONTACT POINTS SHALL BE CLEANED AND FREE OF FOREIGN MATERIALS SUCH AS PAINT AND CORROSION. IF SURFACE IS COATED, COATING MUST BE REMOVED DOWN TO BARE METAL. AFTER COATING HAS BEEN REMOVED, APPLY A NON-CORROSIVE APPROVED COMPOUND TO THE CLEANED SURFACE AND INSTALL LUGS OR CLAMPS. WHERE GALVANIZING IS REMOVED FROM METAL, IT SHALL BE PAINTED OR TOUCHED UP WITH COLD GALVANIZING PAINT SUCH AS GLAVMOX OR EQUAL.

G. MECHANICAL GROUNDING CONNECTIONS SHALL BE MADE WITH COPPER-SHIELD. THERE IS NO EQUIVALENT FOR THESE ANTI-OXIDATION COMPOUNDS. NO OTHER COMPOUND WILL BE ACCEPTED. COAT ALL WIRES BEFORE LUGGING. COAT ALL SURFACES BEFORE CONNECTING.

FEEDER AND BRANCH CIRCUIT SIZING SCHEDULE - GENERAL PURPOSE

COPPER CONDUCTORS

OVERCURRENT DEVICE RATING (AMPERES)	WIRE SIZE (AWG OR KCMIL)						
	PHASE & NEUTRAL	GROUND	SINGLE PHASE 2 WIRE + G (1PH, 1N, 1G)	SINGLE PHASE 3 WIRE + G (2PH, 1N, 1G)	THREE PHASE 3 WIRE + G (3PH, 1G)	THREE PHASE & NEUTRAL 4 WIRE + G (3PH, 1N, 1G)	ISOLATED GROUND 4 WIRE+2G (3PH, 1N, 2G)
15-20	12	12	3/4"	3/4"	3/4"	3/4"	3/4"
25-30	10	10	3/4"	3/4"	3/4"	3/4"	3/4"
35-40	8	10	3/4"	3/4"	3/4"	3/4"	3/4"
45-50	8 (6)	10	3/4"	3/4"	3/4"	3/4"	3/4"
60	6 (4)	10	3/4" (1)	3/4" (1)	3/4" (1)	3/4" (1)	1"
70	4	8	1"	1 1/4"	1 1/4"	1 1/4"	1 1/4"
80	4 (3)	8	1"	1 1/4"	1 1/4"	1 1/4"	1 1/4"
90-100	3 (2)	8	1 1/4"	1 1/4"	1 1/4"	1 1/4"	1 1/2"
110	2 (1)	6	-	1 1/4"	1 1/4"	1 1/4" (1 1/2")	2"
125	1 (1/0)	6	-	1 1/4" (1 1/2")	1 1/4" (1 1/2")	1 1/2"	2"
150	1/0	6	-	1 1/2"	1 1/2"	1 1/2"	2"
175	2/0	6	-	2"	2"	2"	2"
200	3/0	6	-	2"	2"	2 1/2"	2 1/2"
225	4/0	4	-	2"	2"	2 1/2"	2 1/2"
250	250	4	-	2 1/2"	2 1/2"	2 1/2"	2 1/2"
300	350	4	-	2 1/2"	2 1/2"	3"	3"
350	500	3	-	3"	3"	3"	3"
400	600	3	-	3"	3"	3 1/2"	4"
450	2-4/0	2-2	-	2-2"	2-2"	2-2 1/2"	2-2 1/2"
500	2-250	2-2	-	2-2 1/2"	2-2 1/2"	2-2 1/2"	2-2 1/2"
600	2-350	2-1	-	2-2 1/2"	2-2 1/2"	2-3"	2-4"
700	2-500	2-1/0	-	2-3"	2-3"	2-3"	3-3"
800	2-600	2-1/0	-	2-3"	2-3"	2-3 1/2"	2-3 1/2"
1000	3-400	3-2/0	-	3-3"	3-3"	3-3"	3-3"
1200	3-600	3-3/0	-	3-3 1/2"	3-3 1/2"	3-3 1/2"	3-4"
1600	4-600	4-4/0	-	4-3 1/2"	4-3 1/2"	4-3 1/2"	4-4"
2000	5-600	5-250	-	5-3 1/2"	5-3 1/2"	5-3 1/2"	5-4"

NOTES:

1. CONTRACTOR TO SIZE FEEDERS AND BRANCH CIRCUITS BASED ON THIS SCHEDULE AND OVER CURRENT DEVICE SIZE, UNLESS NOTED OTHERWISE.
2. CONTRACTOR MAY COMBINE 20A CIRCUITS AS NOTED IN SPECIFICATION.
3. CONDUCTORS ARE BASED ON THHN/THWN UP TO AND INCLUDING #4/0. LARGER THAN #4/0 ARE BASED ON TYPE XHHW.
4. CONDUCTORS ARE BASED ON 90°C, 600V. INSULATED COPPER WIRE APPLIED AT 75°C FOR TERMINATION RATED 60/75°C OR 75°C. FOR TERMINATION RATED AT 60°C, USE CONDUCTORS AND CONDUIT SIZES INDICATED IN PARENTHESES.
5. CONDUIT SIZES ARE VALID FOR EMT OR RGS. CONDUIT SIZES SHALL BE ADJUSTED AS REQUIRED FOR OTHER TYPES OF CONDUIT.
6. ELECTRICAL CONTRACTOR TO COORDINATE WITH MECHANICAL CONTRACTOR AND PROVIDE REQUIRED WIRE SIZES TO ACCOMMODATE MECHANICAL EQUIPMENT LUG SIZES. (EXAMPLE: 2#3/0 IN LIEU OF 1#600 KCMIL PER PHASE FOR 400 AMPERE OVERCURRENT DEVICE)
7. SIZE OF DISCONNECT SWITCH LOCATED AT EQUIPMENT SHALL BE SIZED BASED UPON OVERCURRENT PROTECTION OF THAT DEVICE.
8. PRIOR APPROVAL FROM ENGINEER SHALL OCCUR IF A DIFFERENT SIZE/NUMBER OF CONDUCTORS IS TO BE USED. AMPACITY SHALL BE EQUAL OR GREATER.

REV	DESCRIPTION	DATE	BY
001	50% CD	6/22/2021	ADW
002	COMMMENTS	7/9/2021	ADW
003	COMMENTS	8/12/2021	ADW

SITE NAME:

RED PEAK

SITE ADDRESS:

UNNAMED ROAD
SUN VALLEY, NV 89433

WASHOE COUNTY TECHNOLOGY SERVICES

230 EDISON WAY
RENO, NV 90502

L3HARRIS

L3HARRIS COMMUNICATIONS SYSTEMS

1421 EAST SUNSET RD, SUITE 18
LAS VEGAS, NV 89120

COMMUNICATIONS SERVICES, INC.

14350 N. 87th ST., STE. 145
SCOTTSDALE, AZ 85260
PHONE: 480.291.6824

L3HARRIS™ COMMUNICATIONS SYSTEMS
PUBLIC SAFETY & PROFESSIONAL COMMUNICATIONS

CONTRACT 16CS02712

PRELIMINARY ENGINEERING CONSTRUCTION DRAWINGS COMPANY CONFIDENTIAL

SHEET TITLE: R777-S101-X-X
DATE: 2021-07-09
PREPARED BY: ADW COMM
VERSION 003

NEVADA SHARED RADIO SYSTEM
RED PEAK
ELECTRICAL NOTES
PAGE E-2

COPYRIGHT © 2021 L3HARRIS TECHNOLOGIES. ALL RIGHTS RESERVED

Exhibit B

SHORT-CIRCUIT CALCULATIONS

THE FOLLOWING CALCULATIONS ARE BASED ON THE "POINT-BY POINT" METHOD FOR SINGLE PHASE POWER, WHERE:

Isc = Isc x M M = 1/(1+f) $f = \frac{2 \times 2L \times I}{C \times E}$ XFMR: $f = \frac{Ip(sca) \times Vp \times 2 \times \%Z}{100{,}000 \times KVA}$ $IS(sca) = \frac{Vp \times M \times Is(sca)}{Vs}$

(ALL CALCULATIONS UTILIZE COPPER CONDUCTORS)

Location	DESCRIPTION	Isc
	SERVICE TRANSFORMER, 50kVA, 240V, 1ϕ AVAILABLE FAULT CURRENT: 22,000 Amps	AS DESIGNED
F1	FROM UTILITY TRANSFORMER TO DISCONNECT SWITCH *200ft with (1) #4/0 CU in PVC conduit*	6,877 Amps
F2	FROM DISCONNECT SWITCH TO ATS *30ft with (1) #3/0 CU in PVC conduit*	6,065 Amps
F3	FROM ATS TO PANEL A *5ft with (1) #3/0 CU in STEEL conduit*	5,971 Amps

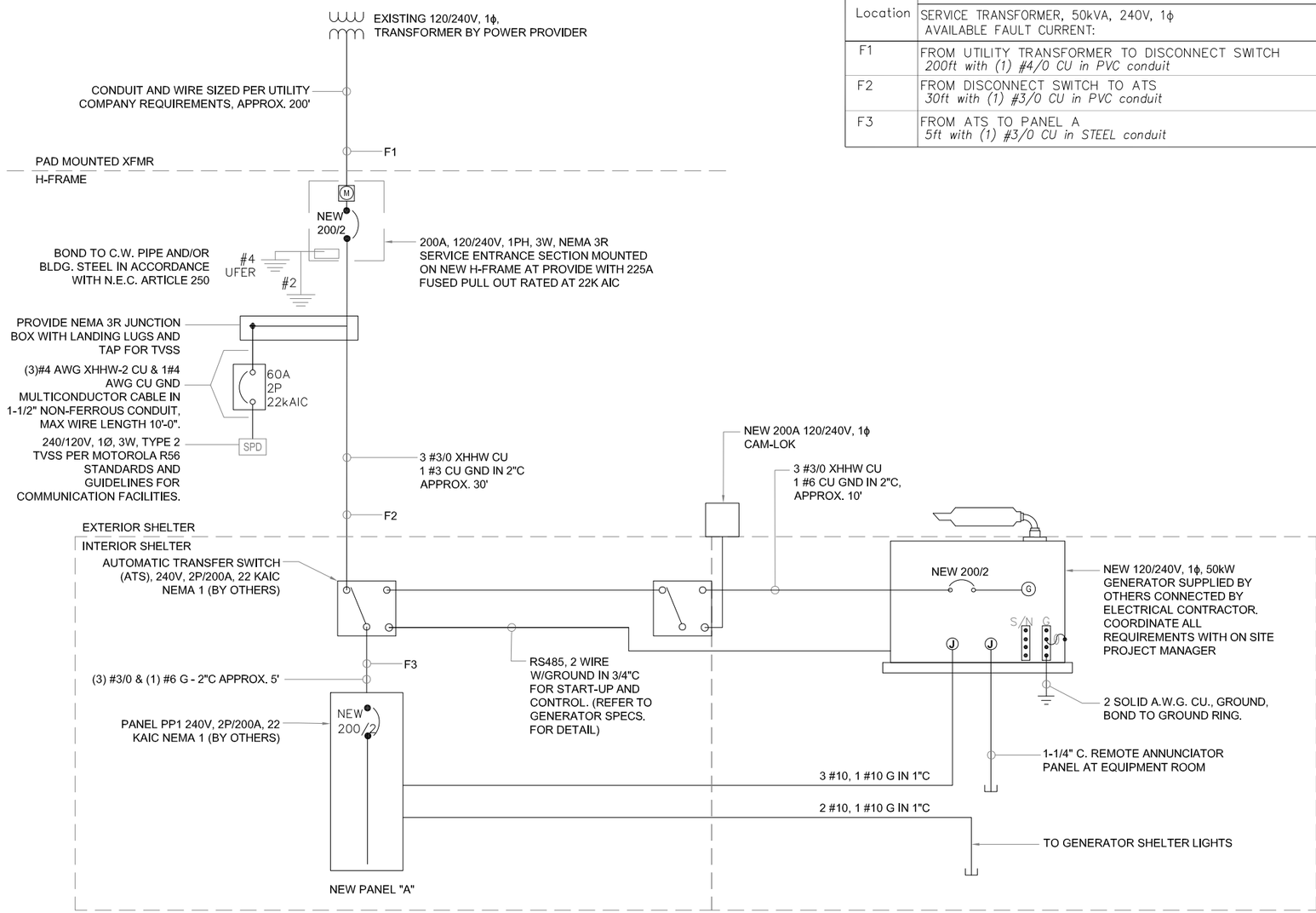

SINGLE LINE DIAGRAM

REV	DESCRIPTION	DATE	BY
001	50% CD	6/22/2021	ADW
002	COMMMENTS	7/9/2021	ADW
003	COMMENTS	8/12/2021	ADW

SITE NAME:

RED PEAK

SITE ADDRESS:

UNNAMED ROAD
SUN VALLEY, NV 89433

WASHOE COUNTY TECHNOLOGY SERVICES

230 EDISON WAY
RENO, NV 90502

L3HARRIS™

L3HARRIS COMMUNICATIONS SYSTEMS

1421 EAST SUNSET RD, SUITE 18
LAS VEGAS, NV 89120

COMMUNICATIONS SERVICES, INC.

14350 N. 87th ST., STE. 145
SCOTTSDALE, AZ 85260
PHONE: 480.291.6824

L3HARRIS™ COMMUNICATIONS SYSTEMS
PUBLIC SAFETY & PROFESSIONAL COMMUNICATIONS

CONTRACT 16CS02712

PRELIMINARY ENGINEERING CONSTRUCTION DRAWINGS COMPANY CONFIDENTIAL

SHEET TITLE: R777-S101-X-X
DATE: 2021-07-09
PREPARED BY: ADW COMM
VERSION 003

NEVADA SHARED RADIO SYSTEM
RED PEAK
ONE-LINE DIAGRAM
PAGE E-3

COPYRIGHT © 2021 L3HARRIS TECHNOLOGIES. ALL RIGHTS RESERVED

Exhibit B

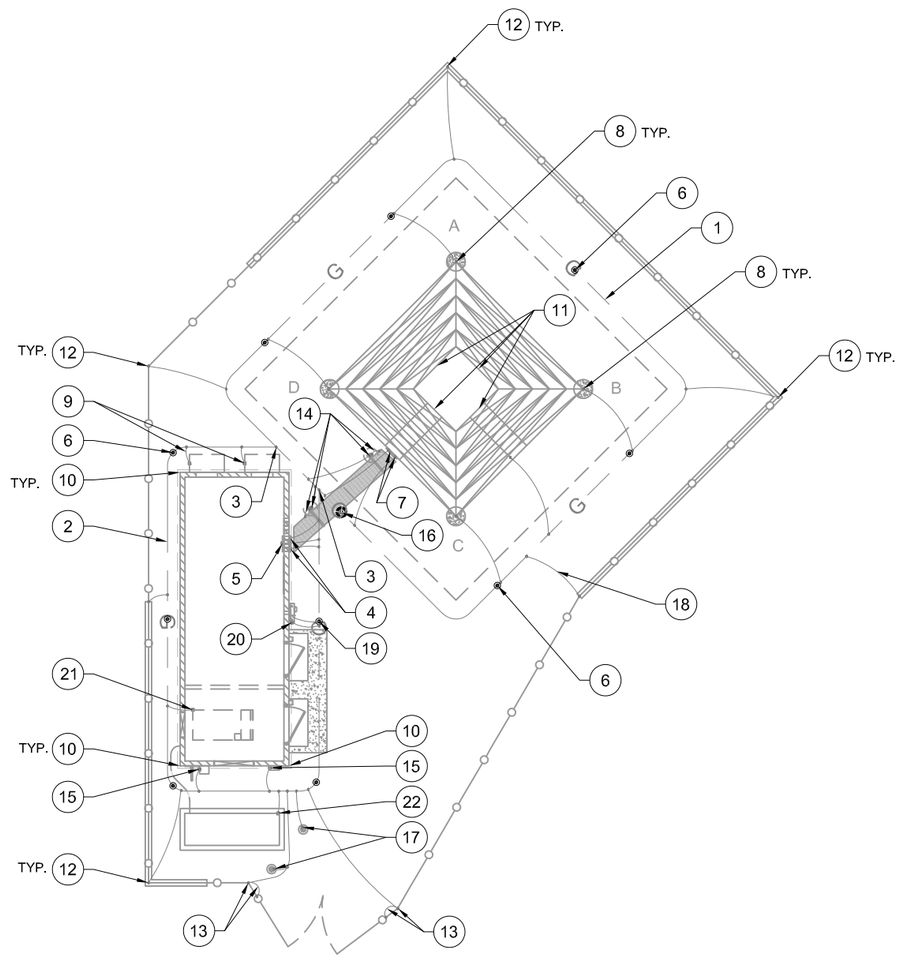

GROUNDING PLAN

N

SCALE: 1/16" = 1'-0"

16' 12' 8' 4' 0" 16'

LEGEND:

TGB / AGB	TINNED SOLID ALLOY 110 COPPER TOWER/ANTENNA BUS BAR BONDED TO TOWER STEEL.
	TINNED SOLID ALLOY 110 COPPER EXTERNAL GROUND BUS BAR.
	SOLID ALLOY 110 COPPER MAIN GROUND BUS BAR.
	ELECTROLYTIC GROUND ROD WITH TEST WELL, REFER DETAIL 5 ON SHEET G-2.
	5/8" DIA. x 10' COPPER CLAD GROUND ROD. REFER DETAIL 4 ON SHEET G-2.
— G — G —	GROUND RING, REFER DETAIL 3 ON SHEET G-2.
	EXOTHERMIC WELD OR IRREVERSIBLE HIGH-COMPRESSION CRIMP.
	MECHANICAL CONNECTION.

GENERAL GROUNDING NOTES:

A. THESE DRAWINGS REPRESENT THE GENERAL EXTENT AND ARRANGEMENT OF SYSTEMS, BUT ARE NOT TO BE CONSIDERED FABRICATION DRAWINGS. COORDINATE WITH OTHER TRADES, AND PROVIDE EACH SYSTEM COMPLETE, INCLUDING ALL NECESSARY COMPONENTS, FITTINGS AND OFFSETS.
B. INSTALL SYSTEMS SUCH THAT REQUIRED CLEARANCE AND SERVICE ACCESS SPACE IS PROVIDED AROUND ALL MECHANICAL AND ELECTRICAL EQUIPMENT, AND AROUND ANY COMPONENTS WHICH REQUIRE SERVICE ACCESS.
C. PROVIDE SUPPLEMENTARY STEEL AS REQUIRED FOR THE PROPER SUPPORT OF ALL SYSTEMS.
D. REFER TO G-2 FOR GROUNDING DETAILS.
E. ALL METALLIC SURFACES SHALL BE PREPARED PRIOR TO BONDING, COLD GALV. SPRAY SHALL BE USED ON ANY EXOTHERMIC WELD TO PREVENT CORROSION, ANY AREA TO BE COLD GALV. SPRAY SHALL BE TAPED OFF PRIOR TO APPLICATION.
F. REFER L3HARRIS SITE GROUNDING AND LIGHTNING PROTECTION GUIDELINES

CONSTRUCTION KEYED NOTES: (#)

1. #2 AWG SOLID BARE TINNED COPPER CONDUCTOR TOWER GROUND RING
2. #2 AWG SOLID BARE TINNED COPPER CONDUCTOR SHELTER GROUND RING
3. BOND TOWER GROUND RING TO SHELTER GROUND RING RING WITH #2 AWG (TYP. 2 CONNECTIONS)
4. EXTERNAL GROUND BAR. BOND TO GROUND RING WITH (2) #2 AWG SOLID TINNED BARE COPPER CONDUCTORS.
5. INTERNAL MAIN GROUND BUS BAR INSTALLED BY SHELTER MANUFACTURER (TYP.)
6. NEW 5/8" DIA. x 10' LONG COPPER CLAD GROUND ROD PLACED MINIMUM EVERY 10' APART. REFER TO DETAIL 4 ON SHEET G-3
7. TOWER GROUND BUS BAR. BOND TO GROUND RING WITH #2 AWG SOLID TINNED BARE COPPER CONDUCTOR. BOND TO TOWER GROUND BUS BAR DIRECTLY TO TOWER STEEL (TYP.). REFER DETAIL 4 ON SHEET G-3
8. BOND TOWER LEGS (AT MANUFACTURER INSTALLED BONDING TAB) TO GROUND RING. UNDER NO CIRCUMSTANCES WILL EXOTHERMIC WELDING BE PERMITTED ON THE TOWER LEG MEMBER, TYPICAL 3 LOCATIONS. REFER TO DETAIL 7 ON SHEET G-2
9. BOND SHELTER A/C UNIT MECHANICALLY TO SHELTER GROUND RING WITH #2 AWG SOLID TINNED BARE COPPER CONDUCTOR. REFER DETAIL 2 ON SHEET G-3
10. BOND SHELTER SUPPORT BEAM/PLATE TO SHELTER GROUND RING WITH #2 AWG (TYP.) PER SHELTER MANUFACTURER SPECIFICATIONS
11. BOND ANTENNA TO ANTENNA GROUND BUS BAR (TYP.). REFER TO DETAIL 5 ON SHEET G-3
12. BOND FENCE FABRIC, SUPPORT POST AND GATE POST TO GROUND RADIAL (TYP.), REFER TO DETAIL 1 ON SHEET G-3
13. BOND GATE POST TO GROUND RING (TYP.), REFER TO DETAIL 1 ON SHEET G-3
14. BOND ICE BRIDGE POST TO GROUND RING, REFER TO DETAIL 8 ON SHEET G-2
15. ANCILLARY METALLIC EQUIPMENT. BOND TO SHELTER GROUND RING WITH #2 AWG SOLID TINNED BARE COPPER CONDUCTOR (TYP)
16. TEST WELL, REFER TO DETAIL 5 ON SHEET G-2
17. BOND BOLLARD TO RADIAL GROUND RING WITH #2 AWG
18. BOND LINE FENCE POST WITHIN 6' OF GROUNDING SYSTEM TO GROUND RING/RADIAL WITH #2 AWG (TYP.)
19. 5/8" DIA. x 10' LONG COPPER CLAD SERVICE GROUND ROD PLACED MINIMUM EVERY 10' APART. REFER TO DETAIL 6 ON SHEET G-2
20. BOND UTILITY BOXES (MECHANICALLY) TO RADIAL GROUND RING WITH #2 AWG
21. BOND GENERATOR HOUSING TO SHELTER GROUND RING WITH #2 AWG
22. BOND DIESEL TANK LEG TO SHELTER GROUND RING WITH #2 AWG

REV	DESCRIPTION	DATE	BY
001	50% CD	6/22/2021	ADW
002	COMMMENTS	7/9/2021	ADW
003	COMMENTS	8/12/2021	ADW

SITE NAME:
RED PEAK
SITE ADDRESS:
UNNAMED ROAD
SUN VALLEY, NV 89433

WASHOE COUNTY TECHNOLOGY SERVICES
230 EDISON WAY
RENO, NV 90502

L3HARRIS COMMUNICATIONS SYSTEMS
1421 EAST SUNSET RD, SUITE 18
LAS VEGAS, NV 89120

COMMUNICATIONS SERVICES, INC.
14350 N. 87th ST., STE. 145
SCOTTSDALE, AZ 85260
PHONE: 480.291.6824

L3HARRIS™ COMMUNICATIONS SYSTEMS
PUBLIC SAFETY & PROFESSIONAL COMMUNICATIONS

CONTRACT 16CS02712

PRELIMINARY ENGINEERING CONSTRUCTION DRAWINGS COMPANY CONFIDENTIAL

SHEET TITLE: R777-S101-~~X-X~~
DATE: 2021-07-09
PREPARED BY: ADW COMM
VERSION 003

NEVADA SHARED RADIO SYSTEM
RED PEAK
GROUNDING PLAN
PAGE G-1

COPYRIGHT © 2021 L3HARRIS TECHNOLOGIES. ALL RIGHTS RESERVED

Exhibit B

NOTE:
ERICO CADWELD "MOLD TYPES" SHOWN HERE ARE EXAMPLES. CONSULT WITH PROJECT MANAGER OR CONSTRUCTION MANAGER FOR SPECIFIC MOLDS TO BE USED FOR THIS PROJECT.

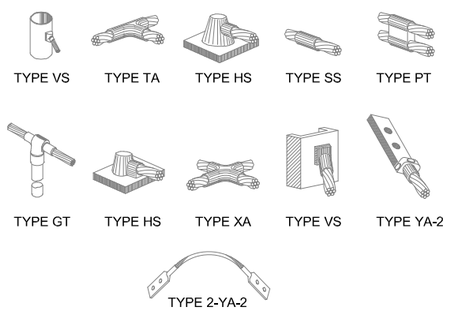

1 EXOTHERMIC WELD
NTS

GROUND LUG KEY NOTES: (#)

1. 3/8"Ø x 1 1/2"
2. S/S NUT
3. S/S LOCKWASHER
4. S/S FLAT WASHER
5. ANTI-OXIDANT COMPOUND APPLIED, PAINT REMOVED IF PRESENT
6. COPPER GROUND BAR
7. S/S FLAT WASHER
8. S/S BOLT (1 OF 2)
9. HEAT SHRINK
10. "DO NOT DISCONNECT" TAG ON ALL GROUND BAR INTERCONNECTS AND EQUALIZERS

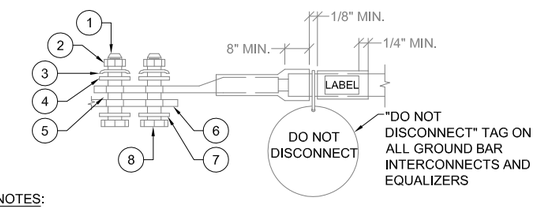

NOTES:
1. ALL HARDWARE 18-8 STAINLESS STEEL INCLUDING LOCK WASHERS, COAT ALL SURFACES WITH AN ANTI-OXIDANT COMPOUND BEFORE MATING.
2. ALL HARDWARE SHALL BE S/S 3/8 INCH DIAMETER OR LARGER.
3. FOR GROUND BOND TO STEEL ONLY: INSERT A DRAGON TOOTH WASHER BETWEEN LUG AND STEEL, COAT ALL SURFACES WITH AN ANTI-OXIDANT COMPOUND BEFORE MATING.
4. THOROUGHLY CLEAN ALL BONDING SURFACES PRIOR TO LUG INSTALLATION.
5. PIGGY BACK LUGS ARE NOT ALLOWED

2 TWO HOLD LUG
NTS

GROUND RING TRENCHING KEY NOTES: (#)

1. BACKFILL PER SPECIFICATIONS
2. FINISHED GRADE
3. #2 AWG SOLID TINNED BARE COPPER WIRE

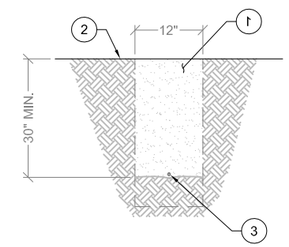

NOTES:

1. DEPTH TO BE 30" OR 6" BELOW FROST LINE, WHICHEVER IS GREATER.
2. GROUND RINGS SHOULD CONSIST OF AT LEAST 20' OF #2 AWG OR LARGER BARE COPPER CONDUCTOR.
3. BURY THE RINGS IN DIRECT CONTACT WITH SOIL.

3 GROUND RING TRENCHING
NTS

GROUND ROD INSTALLATION KEY NOTES: (#)

1. FINISHED GRADE
2. EXOTHERMIC CONNECTION (TYPE GT)
3. 5/8"Øx10' LONG COPPER CLAD GROUND ROD WITH EXOTHERMIC CONNECTION TO GROUND RING
4. #2 AWG SOLID TINNED BARE COPPER WIRE (GROUND RING 30" BELOW GRADE)
5. EXOTHERMIC CONNECTION TO GROUND RING (TYPE PT)
6. #2 AWG SOLID TINNED BARE COPPER WIRE GROUND CONDUCTOR ROUTED IN FLEXIBLE NON-METALLIC LIQUID TIGHT CONDUIT (CARFLEX)

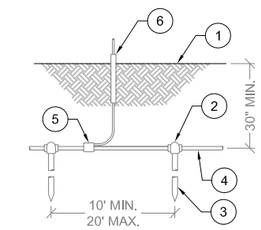

4 GROUND ROD
NTS

TEST WELL KEYED NOTES: (#)

1. 10"Øx42" DEEP PVC SLOTTED GROUND TEST WELL WITH 3/16" THICK STEEL COVER (HARGER #360P42 OR EQUIVALENT)
2. FINISHED GRADE
3. 5/8"x8' LONG COPPER CLAD GROUND ROD
4. #2 AWG SOLID TINNED BARE COPPER WIRE
5. EXOTHERMIC WELD (TYPE PT)
6. GROUND LEADS TO BE ROUTED THRU SLOTTED WELL
7. #2 AWG SOLID TINNED BARE COPPER WIRE TEST LOOP "OMEGA" (Ω) EXTENSION; CADWELD AS CLOSE TO THE GROUND ROD AS POSSIBLE

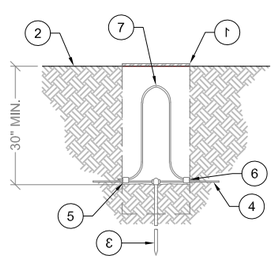

5 TEST WELL
NTS

SERVICE GROUND ROD KEYED NOTES: (#)

1. FINISHED GRADE
2. EXOTHERMIC CONNECTION (TYPE GT)
3. 5/8"Øx8' LONG COPPER CLAD GROUND ROD WITH EXOTHERMIC CONNECTION TO GROUND RING
4. #2 AWG SOLID TINNED BARE COPPER WIRE (GROUND RING 30" BELOW GRADE)
5. EXOTHERMIC CONNECTION TO GROUND RING (TYPE PT)
6. #2 AWG SOLID TINNED BARE COPPER WIRE GROUND CONDUCTOR ROUTED IN FLEXIBLE NON-METALLIC LIQUID TIGHT CONDUIT (CARFLEX)
7. #2 AWG COPPER MAIN EQUIPMENT BONDING JUMPER
8. #2 AWG COPPER MAIN BONDING JUMPER
9. DISCONNECT SWITCH

NOTES:
1. ALL GROUNDING AND BONDING AT THE SERVICE ENTRANCE SHALL COMPLY WITH NEC 250.28, 250.50, 250.66, 250.92, 250.102(C) & 250.56
2. GROUNDING SYSTEM RESISTANCE IS 25 OHMS OR LESS

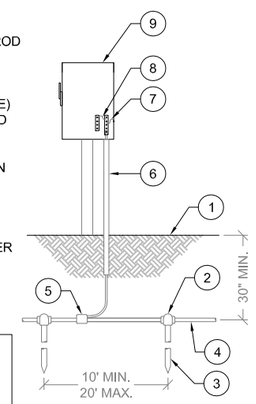

6 SERVICE GROUND ROD
NTS

SELF SUPPORT TOWER GROUNDING KEYED NOTES: (#)

1. EXOTHERMIC WELD TO MANUFACTURER INSTALLED BONDING TAB (TYP. FOR EACH LEG)
2. PVC OR FLEXIBLE NON-METALLIC CONDUIT (CARFLEX)
3. #2 AWG SOLID TINNED BARE COPPER CONDUCTOR (GROUND RING)
4. EXOTHERMIC WELD OR IRREVERSIBLE HIGH COMPRESSION FITTING
5. 5/8"Øx8' LONG COPPER CLAD GROUND ROD
6. WEEP HOLE

NOTES:
1. REFER TO TOWER MANUFACTURER SPECIFICATIONS FOR ADDITIONAL BONDING AND GROUNDING REQUIREMENTS
2. UNDER NO CIRCUMSTANCES WILL EXOTHERMIC WELDING BE PERMITTED ON THE TOWER LEG

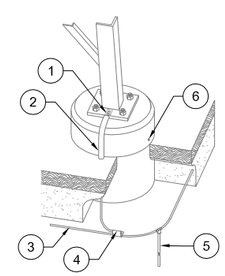

7 TOWER GROUND
NTS

ICE BRIDGE GROUNDING KEYED NOTES: (#)

1. MECHANICALLY BOND JUMPER BETWEEN ALL ICE BRIDGE POSTS AND ICE BRIDGE COVER
2. COAXIAL CABLES, TYP
3. MECHANICALLY BOND ICE BRIDGE SEGMENTS ON BOTH SIDES WITH BOND JUMPERS
4. #2 AWG SOLID BARE TINNED COPPER GROUND IN 3/4" FLEX CONDUIT (FROM POSTS AND EQUIPMENT TO 12" INTO EARTH) TO GROUND RING (TYP)
5. FINISH GRADE

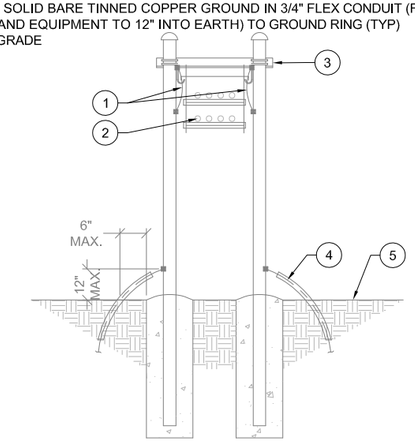

8 ICE BRIDGE GROUNDING
NTS

REV	DESCRIPTION	DATE	BY
001	50% CD	6/22/2021	ADW
002	COMMMENTS	7/9/2021	ADW
003	COMMENTS	8/12/2021	ADW

SITE NAME:
RED PEAK
SITE ADDRESS:
UNNAMED ROAD
SUN VALLEY, NV 89433

WASHOE COUNTY TECHNOLOGY SERVICES
230 EDISON WAY
RENO, NV 90502

L3HARRIS COMMUNICATIONS SYSTEMS
1421 EAST SUNSET RD, SUITE 18
LAS VEGAS, NV 89120

COMMUNICATIONS SERVICES, INC.
14350 N. 87th ST., STE. 145
SCOTTSDALE, AZ 85260
PHONE: 480.291.6824

L3HARRIS™ COMMUNICATIONS SYSTEMS
PUBLIC SAFETY & PROFESSIONAL COMMUNICATIONS

CONTRACT 16CS02712

PRELIMINARY ENGINEERING CONSTRUCTION DRAWINGS COMPANY CONFIDENTIAL

SHEET TITLE: R777-S101-~~X-X~~
DATE: 2021-07-09
PREPARED BY: ADW COMM
VERSION 003

NEVADA SHARED RADIO SYSTEM
RED PEAK
GROUNDING DETAILS
PAGE G-2

COPYRIGHT © 2021 L3HARRIS TECHNOLOGIES. ALL RIGHTS RESERVED

Exhibit B

CORNER FENCE GROUNDING (#)
KEY NOTES:

1. ERICO EXOTHERMIC WELD CONNECTION "VB" OR EQUIVALENT
2. DETERRENT WIRE GROUNDING CLAMP (HARGER FGC2) TRIM LEAD AS CLOSE TO GROUNDING CLAMP AS POSSIBLE
3. ERICO EXOTHERMIC WELD CONNECTION "HA" OR EQUIVALENT
4. #2 AWG SOLID TINNED BARE COPPER WIRE, BOND FENCE FABRIC TO GROUND CONDUCTOR
5. FENCE FABRIC GROUNDING CLAMP (TYP.)
6. GROUND CONDUCTOR WITH ERICO EXOTHERMIC WELD "VS" OR EQUIVALENT
7. CONNECT FENCE BONDING CONDUCTOR TO EXTERNAL GROUNDING ELECTRODE SYSTEM USING EXOTHERMIC WELD OR IRREVERSIBLE HIGH COMPRESSION FITTING
8. ERICO EXOTHERMIC WELD CONNECTION "PC" OR EQUIVALENT TO GROUND RING
9. GROUNDING RADIAL TO SYSTEM GROUND RING
10. GATE JUMPER WITH EIRCO EXOTHERMIC WELD "VS" OR EQUIVALENT

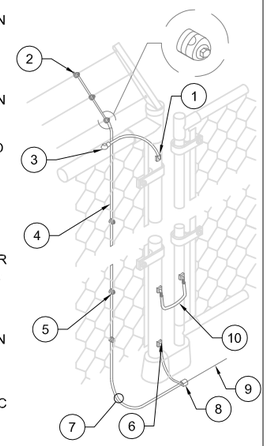

1 CHAIN LINK FENCE BONDING
NTS

EX. METALLIC EQUIPMENT BONDING KEYED NOTES: (#)

1. SHELTER
2. EXTERIOR METALLIC EQUIPMENT
3. MECHANICAL BONDING CONNECTION (TYPE YA-2)
4. #2 AWG SOLID TINNED BARE COPPER WIRE GROUND CONDUCTOR ROUTED IN FLEXIBLE NON-METALLIC LIQUID TIGHT CONDUIT (CARFLEX)
5. FASTENED CARFLEX W/ HALF STRAPS & 1/4"Ø X 2" (L) RED HEAD HAMMER-SET NAIL DRIVE ANCHOR OR APPROVAL EQUAL
6. GROUND RING
7. EXOTHERMIC CONNECTION TO GROUND RING (TYPE PT)
8. FINISHED GRADE

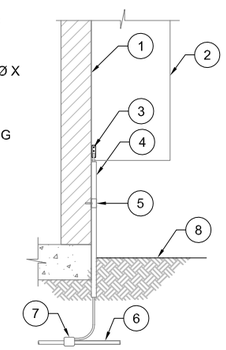

2 EXTERIOR METALLIC BONDING
NTS

ENTRY PANEL KEY NOTES: (#)

1. OUTLINE OF SHELTER ROOF
2. ENTRY PANEL W/ 4"Ø PORTS (TYP.)
3. RF TRANSMISSION LINE (COAX)
4. EXTERNAL GROUND BUS BAR (EGB)
5. #2 AWG SOLID TINNED BARE COPPER GROUNDING ELECTRODE CONDUCTOR TO GROUND RING
6. 1/2" PVC OR FLEXIBLE NON-CONDUCTIVE CONDUIT CONDUCTOR PROTECTION (SEAL W/ RTV SILICONE AFTER CONDUCTOR IS ROUTED THROUGH); SECURE CONDUCTOR PROTECTION TO EXTERIOR WALL EVERY 36"
7. SHELTER WALL
8. INTERNAL MASTER GROUND BUS BAR (MGB)
9. GROUND SURGE ARRESTORS TO INTERNAL MASTER GROUND BUS BAR W/ #6 AWG THHN GROUND WIRE
10. ARRESTOR TRAPEZE KIT
11. 45° HOLE PENETRATION TO BE 1"Ø FOR 1/2" PVC OR FLEXIBLE NON-CONDUCTIVE CONDUIT (LOW SIDE OF PENETRATION ON EXTERIOR SIDE OF WALL)
12. BOND ENTRY PANEL TO EGB WITH #2 AWG THHN COPPER WIRE

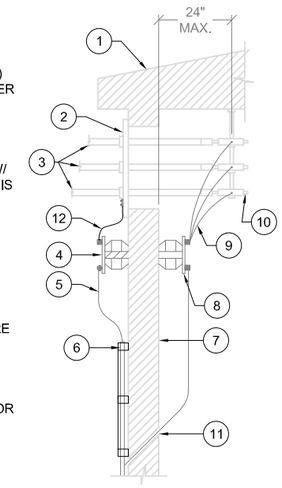

3 ENTRY PANEL BONDING
NTS

TOWER GROUND BAR KEYED NOTES: (#)

1. #6 AWG FROM ANTENNA COAX GROUND KITS
2. TINNED COPPER GROUND BAR
3. EXOTHERMIC WELD
4. (2) #2 AWG SOLID TINNED COPPER TO TOWER GROUND RING IN 3/4" FLEX CONDUIT
5. TWO HOLE LUG, TYP
6. #2 SOLID TINNED COPPER WIRE BONDED TO TOWER

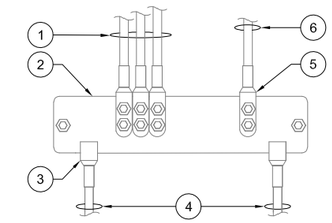

4 TOWER GROUND BAR
NTS

ANTENNA GROUNDING KEYED NOTES: (#)

1. RF TRANSMISSION LINES (COAX) FROM ANTENNA
2. 1/2" COAX JUMPER FROM ANTENNA
3. CONNECTOR WEATHERPROOFING KIT REFER TO DETAIL 4 ON THIS SHEET
4. "SUREGROUND" GROUND KIT (TYP.), REFER TO DETAIL 4 ON THIS SHEET FOR WEATHERPROOFING DETAILS
5. ANTENNA CABLE TO SHELTER (TYP.)
6. #6 AWG THHN COPPER CONDUCTOR
7. TINNED SOLID ALLOY 110 COPPER ANTENNA GROUND BUS BAR (OPTIONAL BOND DIRECTLY TO TOWER STEEL WITH ANGLE ADAPTER IF NO ANTENNA BUS BAR IS AVAILABLE)

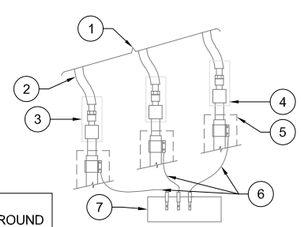

NOTE:
DO NOT INSTALL CABLE GROUND KIT AT A BEND AND ALWAYS DIRECT GROUND WIRE DOWN TO GROUND BAR.

5 ANTENNA BONDING
NTS

WEATHERPROOFING KEYED NOTES: (#)

1. COAX
2. COAX TO JUMPER CONNECTION (TYP.)
3. JUMPER (TYP.)
4. 3M SCOTCH SUPER 33+ VINYL ELECTRICAL TAPE (OR EQUIVALENT)
5. VAPOR WRAP SEALANT

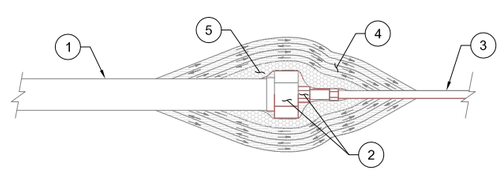

6 WEATHERPROOF DETAIL
NTS

7 NOT USED
NTS

8 NOT USED
NTS

REV	DESCRIPTION	DATE	BY
001	50% CD	6/22/2021	ADW
002	COMMMENTS	7/9/2021	ADW
003	COMMENTS	8/12/2021	ADW

SITE NAME:
RED PEAK
SITE ADDRESS:
UNNAMED ROAD
SUN VALLEY, NV 89433

WASHOE COUNTY TECHNOLOGY SERVICES
230 EDISON WAY
RENO, NV 90502

L3HARRIS COMMUNICATIONS SYSTEMS
1421 EAST SUNSET RD, SUITE 18
LAS VEGAS, NV 89120

COMMUNICATIONS SERVICES, INC.
14350 N. 87th ST., STE. 145
SCOTTSDALE, AZ 85260
PHONE: 480.291.6824

L3HARRIS™ COMMUNICATIONS SYSTEMS
PUBLIC SAFETY & PROFESSIONAL COMMUNICATIONS

CONTRACT 16CS02712

PRELIMINARY ENGINEERING CONSTRUCTION DRAWINGS COMPANY CONFIDENTIAL

SHEET TITLE: R777-S101-~~X-X~~
DATE: 2021-07-09
PREPARED BY: ADW COMM
VERSION 003

NEVADA SHARED RADIO SYSTEM
RED PEAK
GROUNDING DETAILS
PAGE G-3

COPYRIGHT © 2021 L3HARRIS TECHNOLOGIES. ALL RIGHTS RESERVED